DAFTAR ISI
TULUS KIT 3

TL-009A	Infra Red Remote Control (Transmitter)	1
TL-009	Infra Red Remote Control (Receiver)	2 - 3
TL-103B	Sound Control Discotic Lamp (110V - 220V AC)	4 - 5
TL-106	Electronic Sign Flasher (110V - 220V AC)	6
	Plastic Welder Timer Switch	7
TL-109A	Sound Control Discotic Lamp (Xenon Flash Tube 110V - 220V AC)	8 - 9
	Mini Alarm (3V DC)	10
TL-201A	Touch Switch (Door Bell Type 110V - 220V AC)	11
TL-209	Aneka Efek Suara (6V - 9V DC)	12 - 13
	Mini Alarm (6V DC)	14
TL-211A	Anti Theft Infra Red Control Switch (Transmitter)	15
TL-211	Anti Theft Infra Red Control Switch (Receiver)	16 - 17
TL-215	Sound Control Switch	18 - 19
TL-216	Sound Control Switch	20 - 21
TL-231	5 Minutes Timer Switch	22 - 23
TL-232	5 Hours Timer Switch	24 - 25
TL-301A	LED VU Display (6V - 9V DC)	26 - 27
TL-301B	LED VU Display (6V - 12V DC)	28 - 29
TL-302A	LED VU Display (4,5V - 12V DC)	30 - 31
TL-303A	LED VU Display (Langsung Output Amplifier)	32 - 33
TL-304A	LED VU Display (12V DC)	34 - 35
TL-401	Musical Bell (1,5V DC 4 Lagu)	36 - 37
TL-402	Musical Bell (3V DC 8 - 12 Lagu)	38 - 39
TL-402A	Musical Bell (6V - 12V DC 8 - 12 Lagu)	40 - 41
TL-403	Musical Bell (3V DC 10 Lagu)	42 - 43
TL-403A	Musical Bell (6V - 12V DC 10 Lagu)	44 - 45
TL-404	Musical Bell (3V DC 1 Lagu)	46 - 47
TL-601	Electronic Dice (Dadu LED 12V DC)	48 - 49
TL-602	Intercom (4V - 12V DC)	50 - 51
TL-703	0 - 30V 2,5A DC Regulator	52 - 53
TL-706	10V - 15V 3A - 6A DC Regulator	54 - 55
TL-710	0 - 15V 10A DC Regulator	56 - 57
TL-801	Speaker Protector	58 - 59
TL-1002A	T.V. Game (10 Game)	60 - 63
TL-1108	Electronic Digital Clock (110V - 220V AC 50Hz)	64 - 65
TL-1109	Electronic Digital Clock (12V DC)	66 - 68

INFRA RED REMOTE CONTROL
(TRANSMITTER)

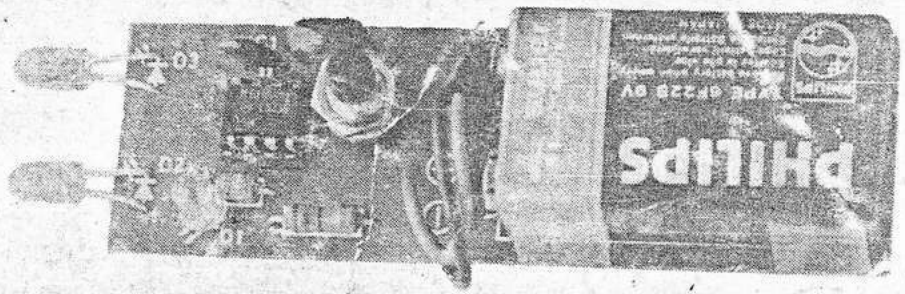

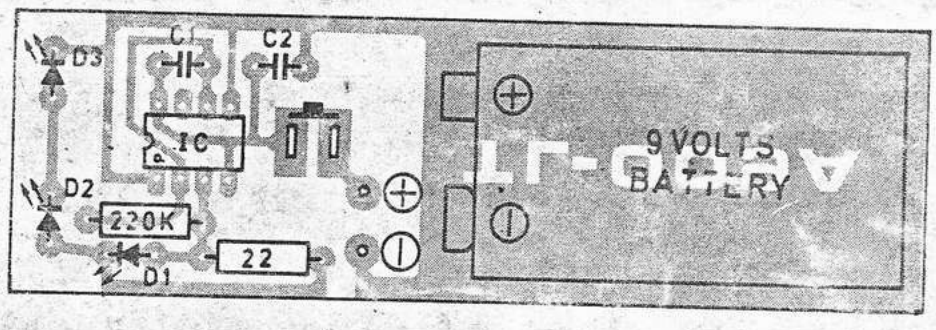

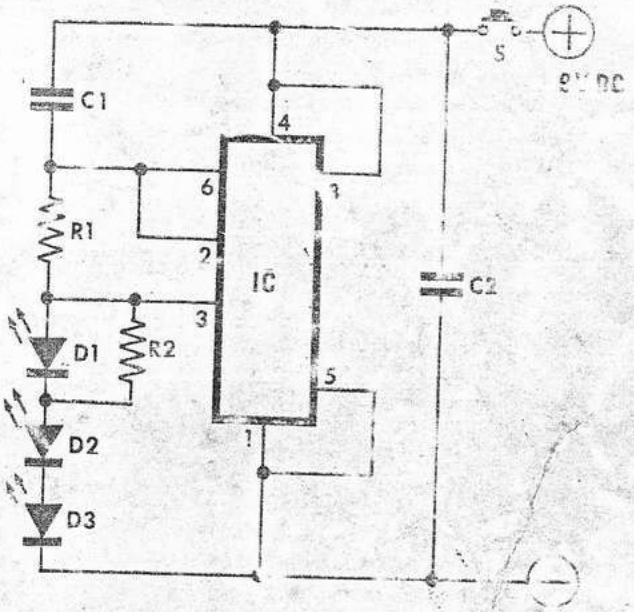

R1	220K	IC	MC1455
R2	22	D1	LED
C1	1KpF	D2.3	INFRA RED
C2	100KpF		

TL-0 9A

TL-009

PARTS LIST

R1	220K
R2	470K
R3	33K
R4.7	180K
R5.9	47K
R6	22K
R8	470
R10	560
R11	6,8K
C1	4,7KpF
C2	10KpF
C3	33KpF
C4	10uF
C5	1uF
C6	100uF
PHOTO TRANSISTOR	PT-500
TR1.2.3.4	CS9014
TR5	CS9013
D1	1N4148
D2	1N4002
IC	SN7473
RELAY	6V DC

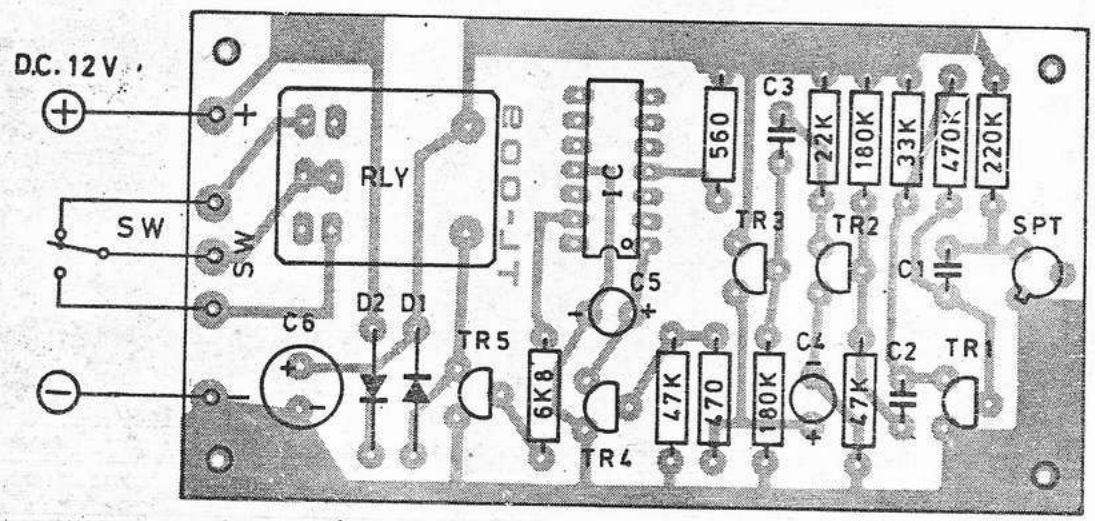

INFRA RED REMOTE CONTROL
(RECEIVER)

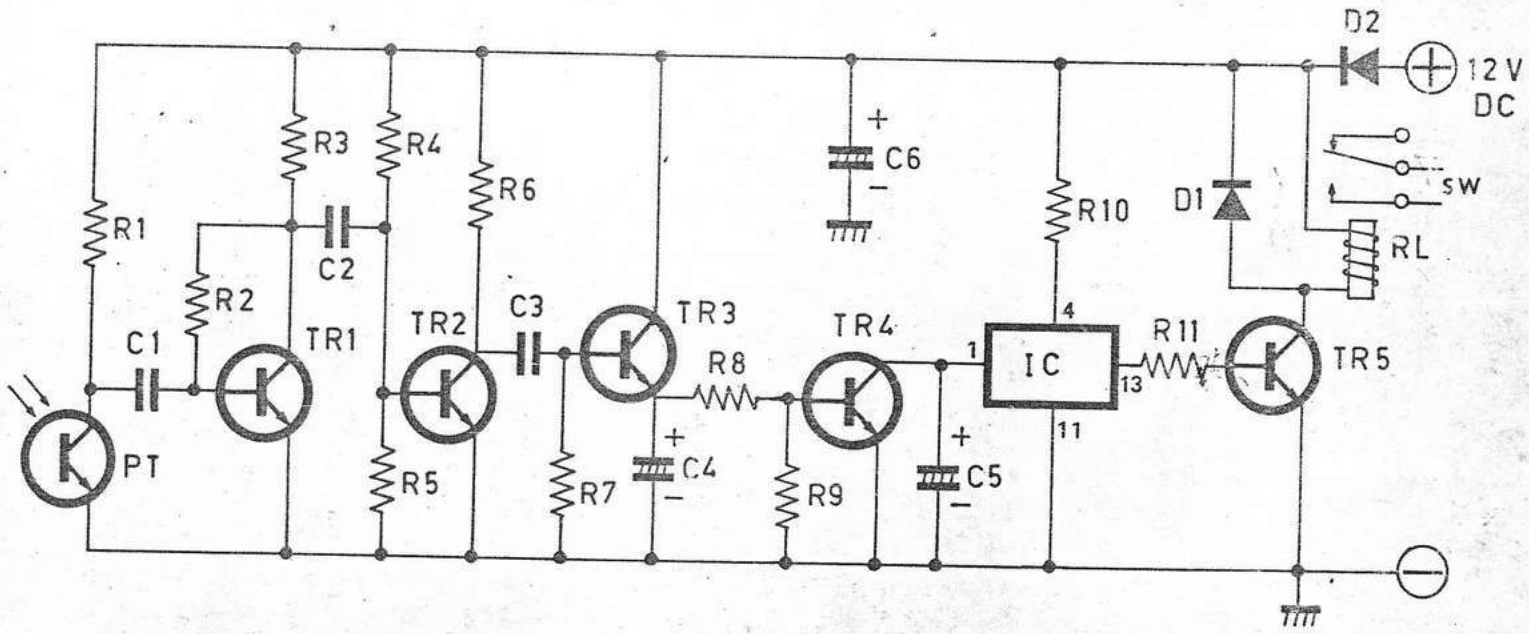

TL-005

CIRCUIT DIAGRAM

TL-103B

PARTS LIST

R1.7.	5,6K
R2	150K
R3.4.11.	47K
R5	220K
R6.8.	470K
R9	33K
R10.22	100K
R12.	22K
R13.15.17.	10K
R14	68K
R16	4,7K
R18.19.20.21.	27K
VR	50K
C1	1kpF50V
C2.3.4.	2,2kpF50V
C5	10kpF50V
C6.8.10.11	0,1uF50V
C7.9	150pF25V
C12	220uF10V
C13	10uF10V
C14	0,1uF600V
TR1.2.3.4	CS9014
D1	IN4002
D2	ZD 6V2
SCR	T-103

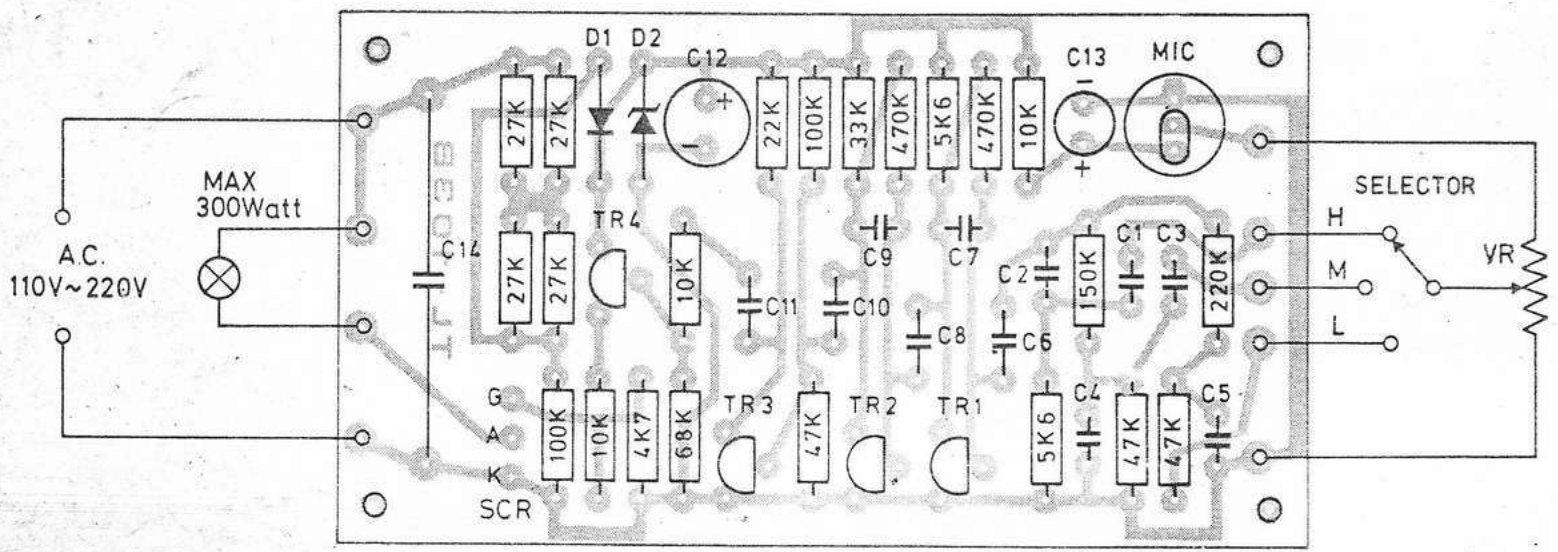

SOUND CONTROL DISCOTIC LAMP

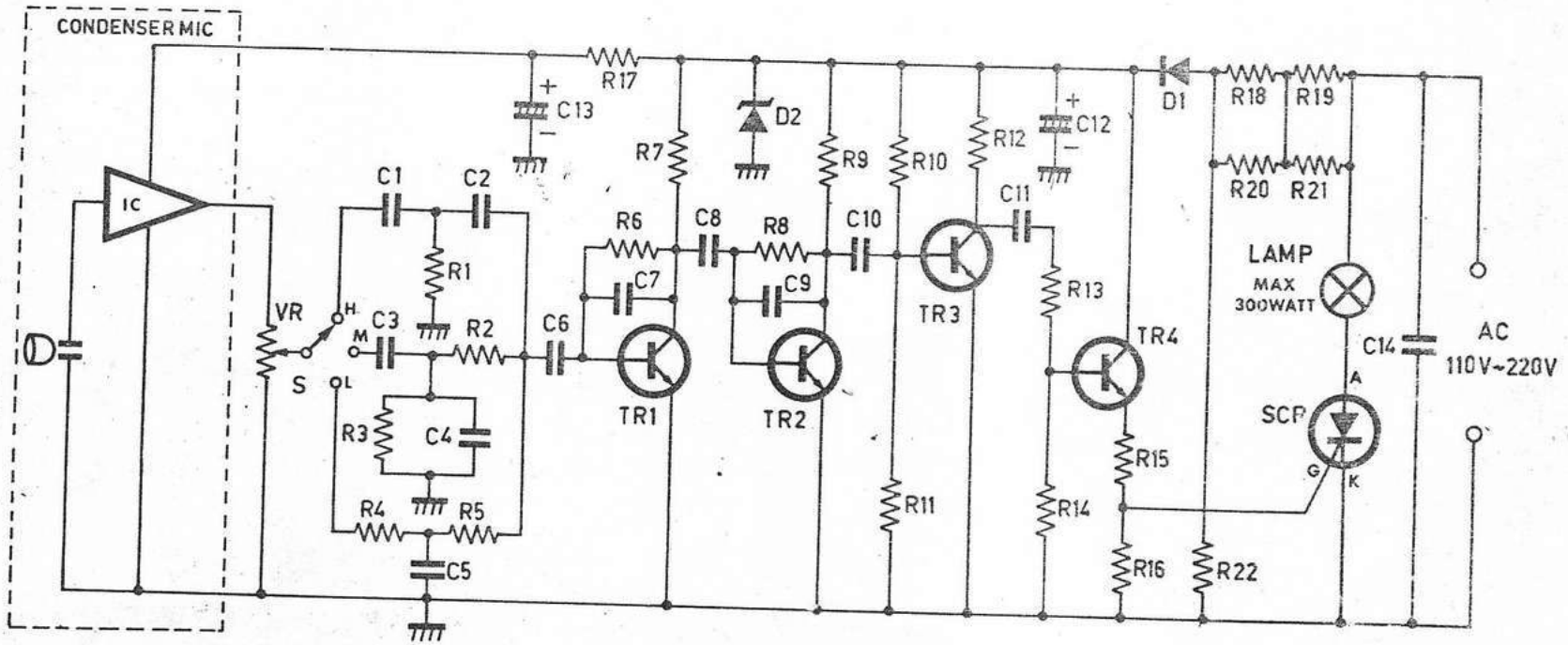

TL-103B

CIRCUIT DIAGRAM

ELECTRONIC SIGN FLASHER

~~R1~~	150K
R2	4,7K
R3	10K
~~VR~~	500K
D	1N4007
C	10uF450V
Ne	NEON LAMP
SCR	T-103

UNTUK 220V

R1	470K
VR	1M

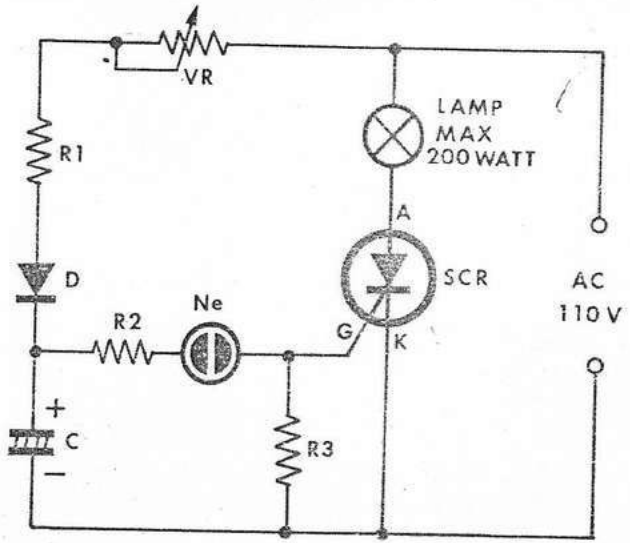

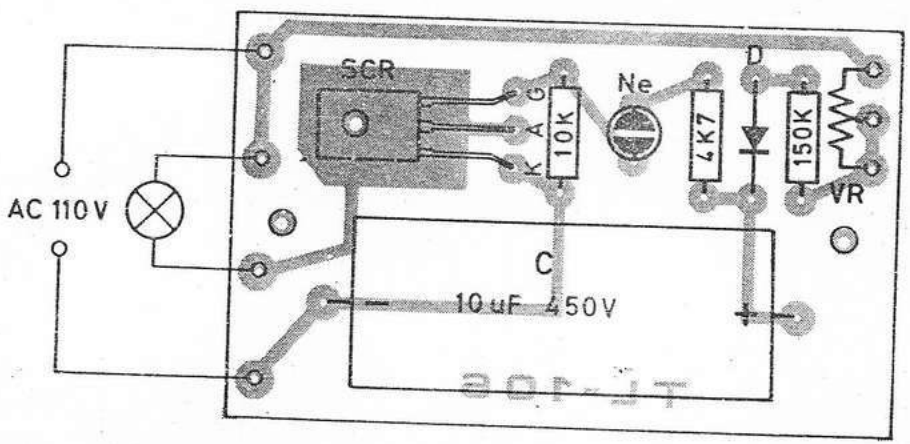

TL-106

PLASTIC WELDER TIMER SWITCH

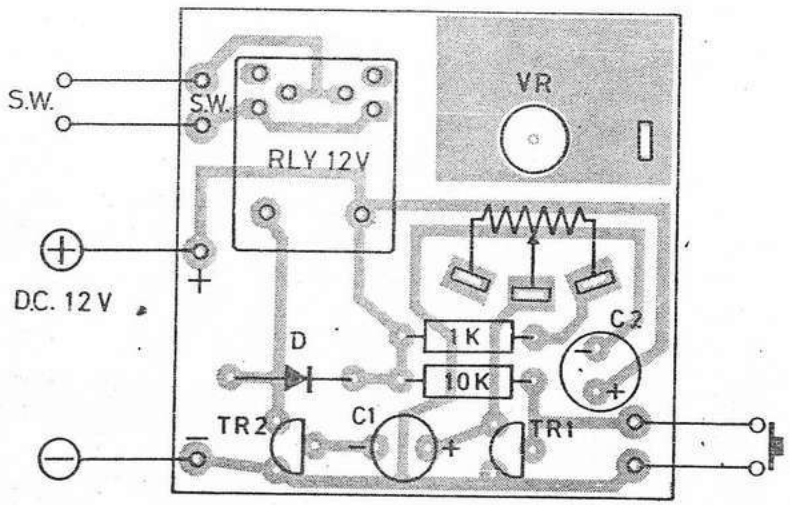

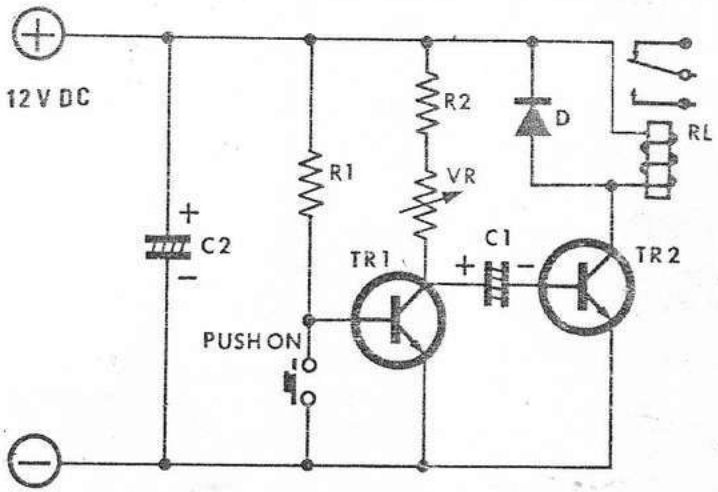

R1	10K
R2	1K
VR	10K
C1	22uF
C2	47uF

TR1	CS9014
TR2	CS9013
D	1N4148
RELAY	12V

TL-109A

PARTS LIST

R1	2,2K
R2.12	5,6K
R3.5	470K
R4.9	33K
R6.7	22K
R8.21	100K
R10.14	10K
R11	68K
R13	4,7K
R15.16	1M
R17.18.19.20	47K
R22	470 ohm 10WATT
VR	50K
C1.3.5.6	0,1uF50V
C2.4	150pF25V
C7	10uF16V
C8	220uF16V
C9	0,1uF250V
C10	47uF450V
C11	10uF450V
TR1.2.3.4	CS9014
SCR	T-103
D1.2.3.4	1N4007
D5	ZD 6V2

T-109 ..... TRIGGER COIL
FT-106 ..... XENON FLASH TUBE
CONDENSER MIC.

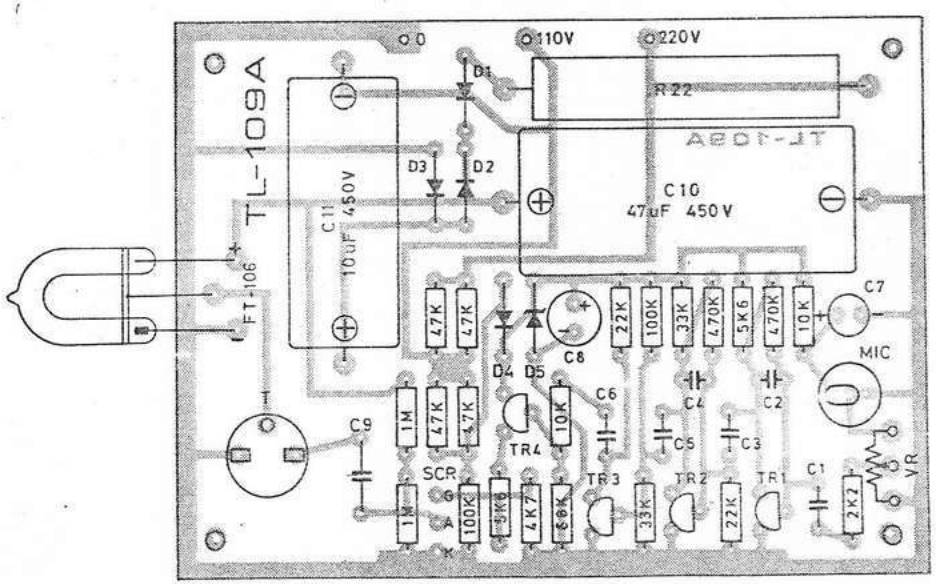

SOUND CONTROL DISCOTIC LAMP

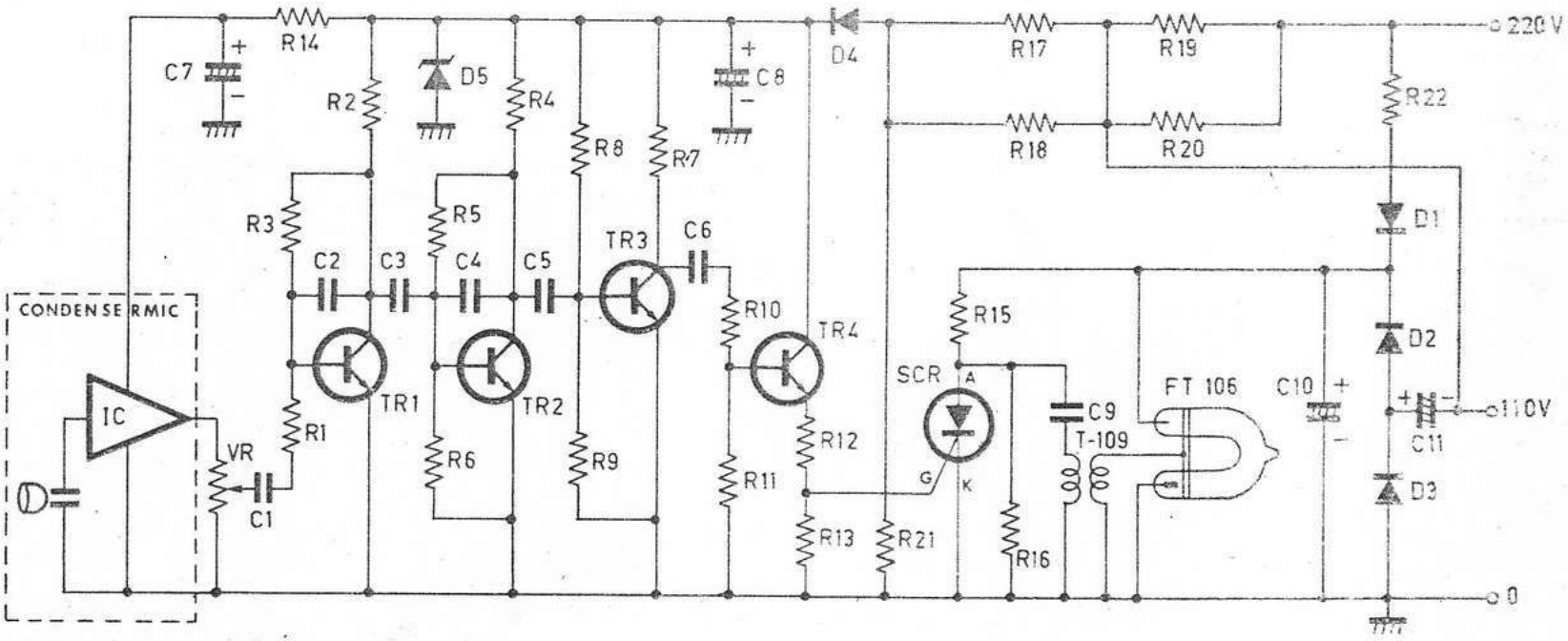

TL-109A

CIRCUIT DIAGRAM

3V MINI ALARM

R1	33K
R2.3	330
VR	3K
C1	47KpF
C2	100uF
D	1N4002
TR1	CS9014
TR2	CS9012
SPEAKER 2"	8 ohm

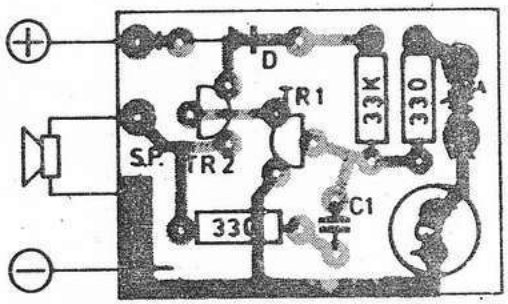

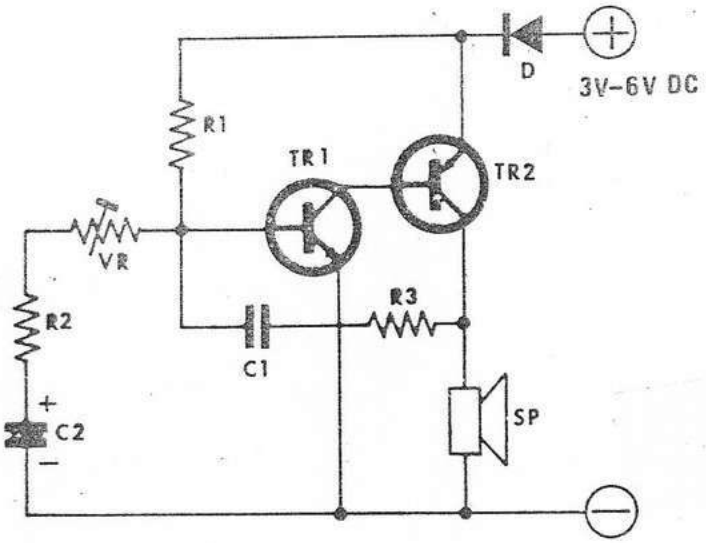

TOUCH SWITCH
DOOR BELL TYPE

R.1	2M2
R.2	10K
R.3	1 K
R.4	2K2
R.5	100K
R.6	47K
C.1	1KpF/50V
C.2	47μF/25V
D.	1N 4002
S.C.R.	T 103
TR.1.2	FCS 9014

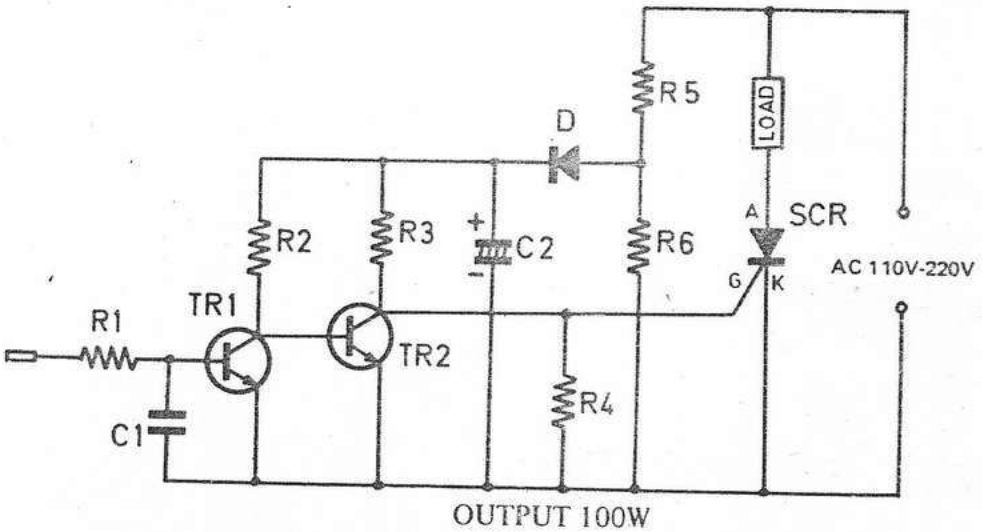

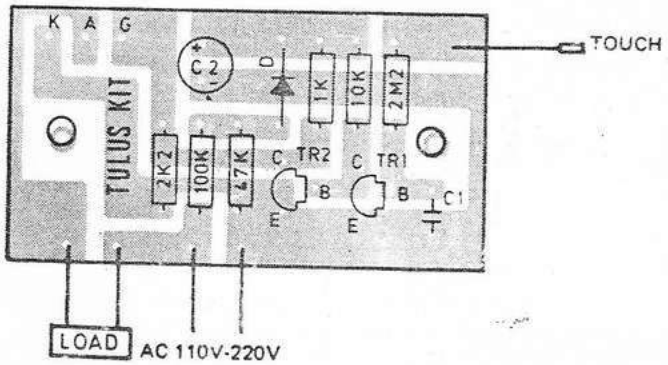

TL-201A

TL-209

PARTS LIST

R1. 4.5.8.	2,2 K
R2. 3	22 K
R6. 7.10.	10 K
R 9. 11	1 K
R 12	220
R 13. 14	4,7 K
R 15	680
VR	5 K
C 1. 2	100 uF
C 3. 10	220 uF
C 4. 5	10 uF
C 6	0,22 uF
C 7	0,047 uF
C 8	0,1 uF
C 9	47 uF
C 11	33 uF
D1	1N4148
D2	1N4002
TR1. 2. 3. 4. 5. 6	FCS9014
TR7	FCS9013
T	P:100 Ohm S:8 Ohm
SP	Speaker 8 Ohm 2"

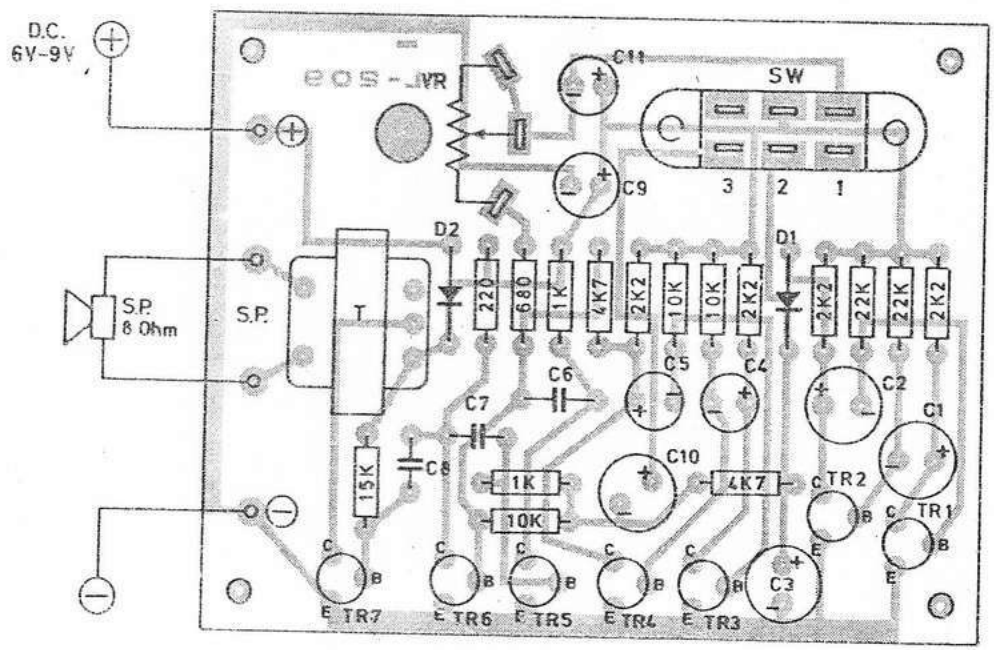

ANEKA EFEK SUARA

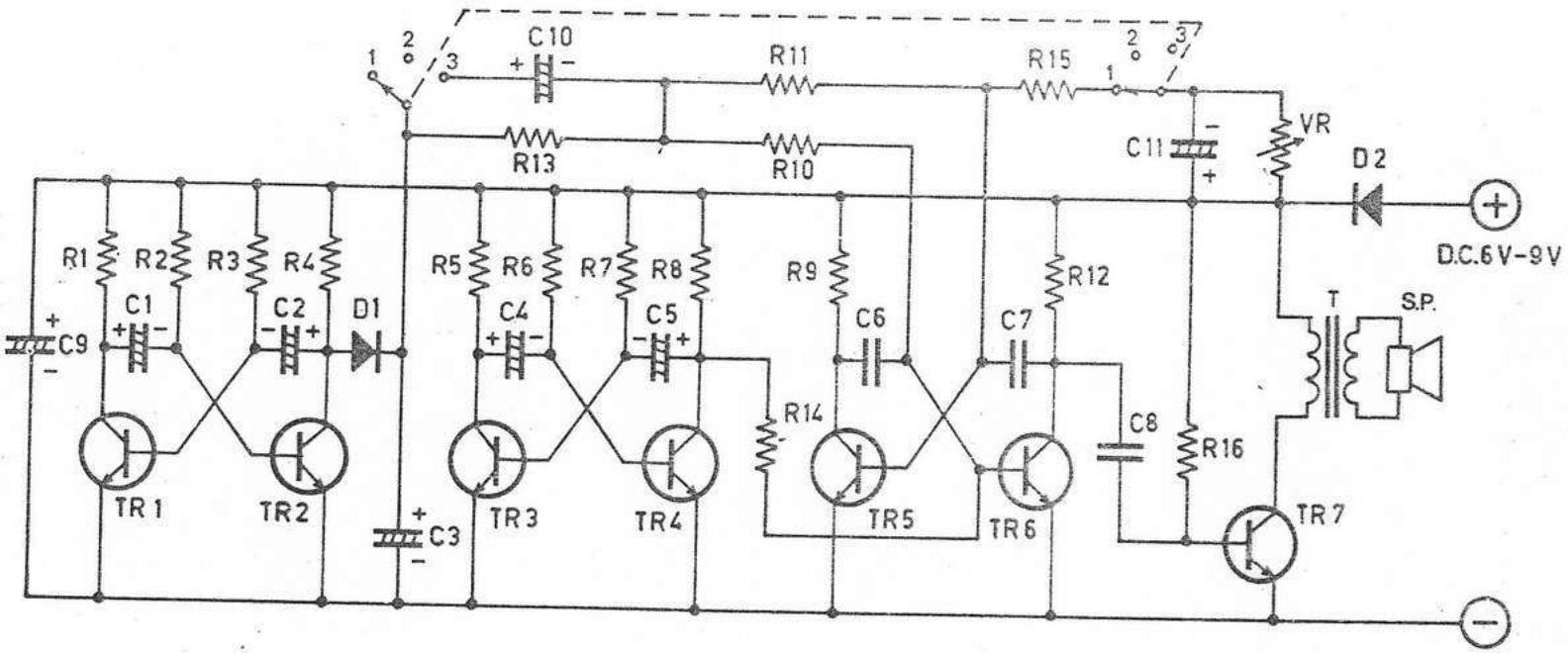

TL-203

CIRCUIT DIAGRAM

6V MINI ALARM

R1	33K
R2	220
VR1.2	3K
C1	47KpF
C2	100uF
D	1N4002
TR1	CS9014
TR2	CS9012
T	P : 5K
	S : 200
SPEAKER 2"	8ohm

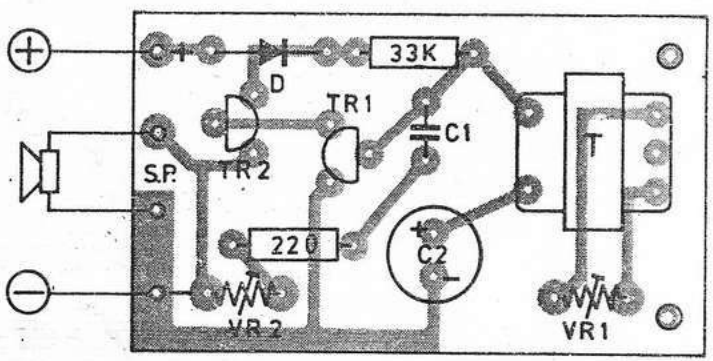

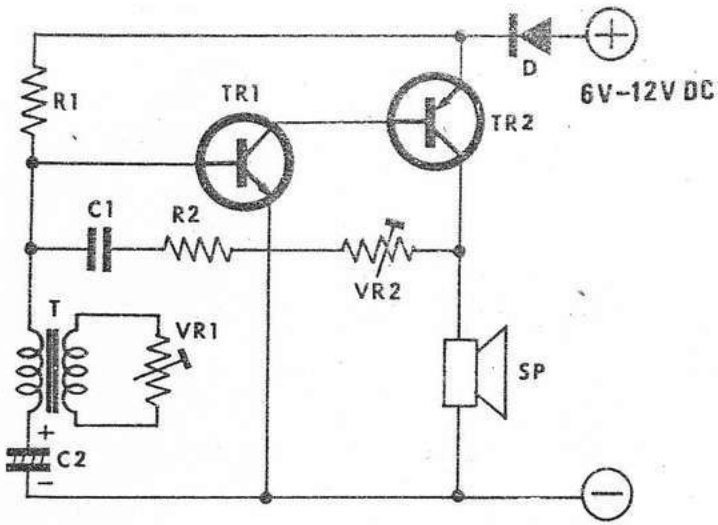

ANTI THEFT INFRA RED CONTROL SWITCH
(TRANSMITTER)

R1	220K
C1	1KpF
C2	100KpF
IC	MC1455
D1	LED
D2.3.	INFRA RED

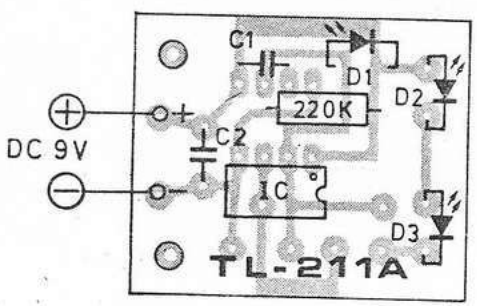

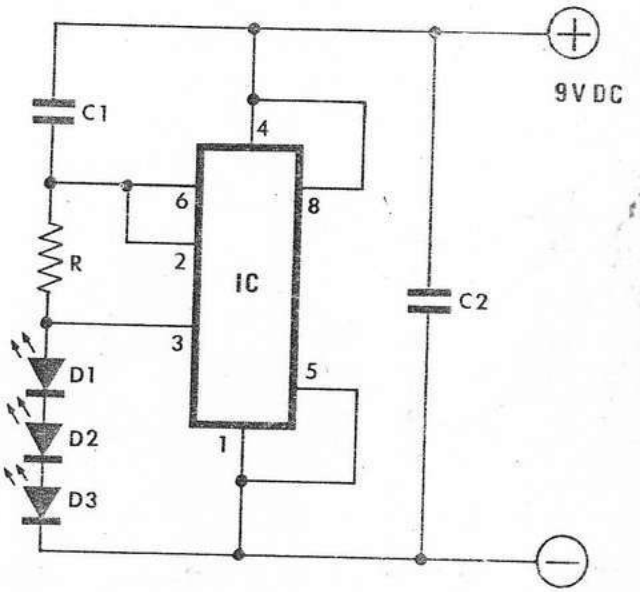

TL-211A

TL-211

PARTS LIST

R1 ..... 220K
R2 ..... 470K
R3 ..... 33K
R4.7 ..... 180K
R5.11 ..... 47K
R6 ..... 22K
R8 470

R9.10 ..... 1K
VR 10K

C1 ..... 4,7KpF
C2 ..... 10KpF
C3 ..... 33KpF
C4 ..... 10uF
C5.6 ..... 100uF

PHOTO TRANSISTOR ..PT-500
TR1.2.3.4 ..... CS9014
TR5 ..... CS9013
D1 ..... LED
D2.3.4.5.6 ..... 1N4148
RELAY ..... 6V DC

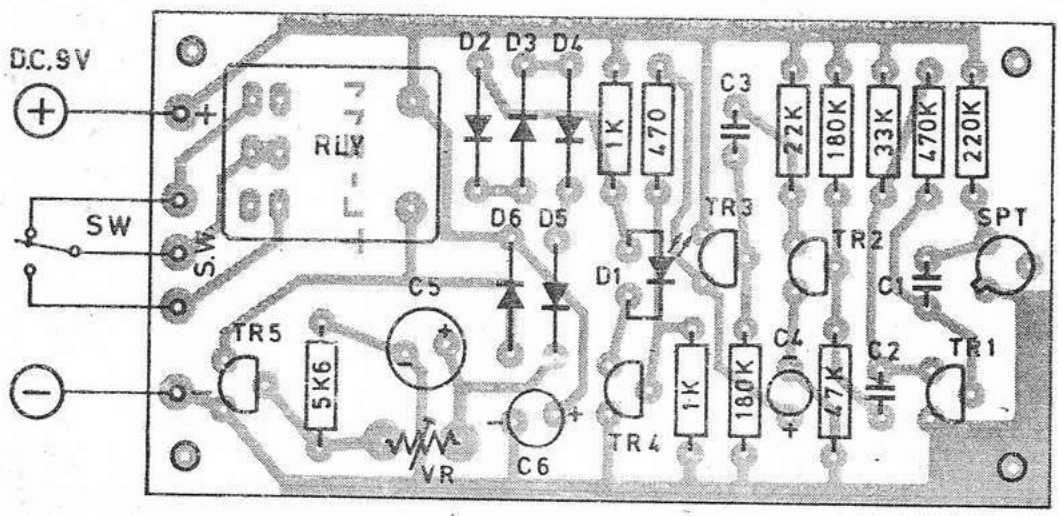

ANTI THEFT INFRA RED CONTROL SWITCH
(RECEIVER)

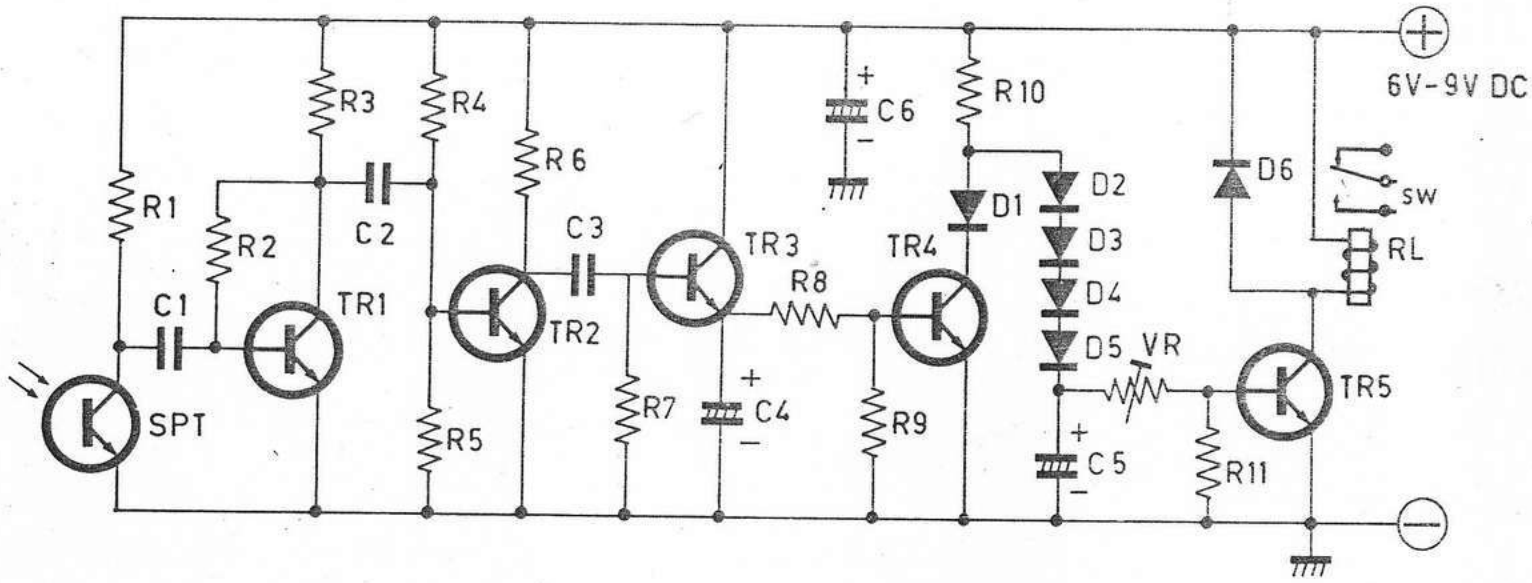

TL-211

CIRCUIT DIAGRAM

TL-215

PARTS LIST

R1	100K
R2	10K
R3	100
R4	3,9K
R5	680
R6	33K
R7.8	2,2K
VR1.2	100K
C1.3	2,2KpF
C2	1uF
C4.5	10KpF
C6	33uF
C7	10uF
D.1.2.3	1N4148
TR1.2	CS9014
TR3	CS9012
TR4	CS9013
CONDENSER MIC	
RELAY 12V	

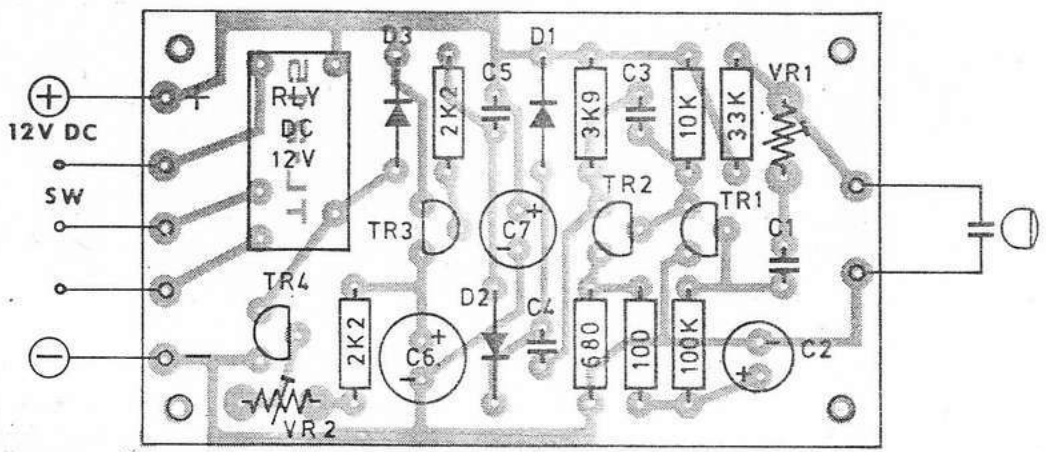

SOUND CONTROL SWITCH

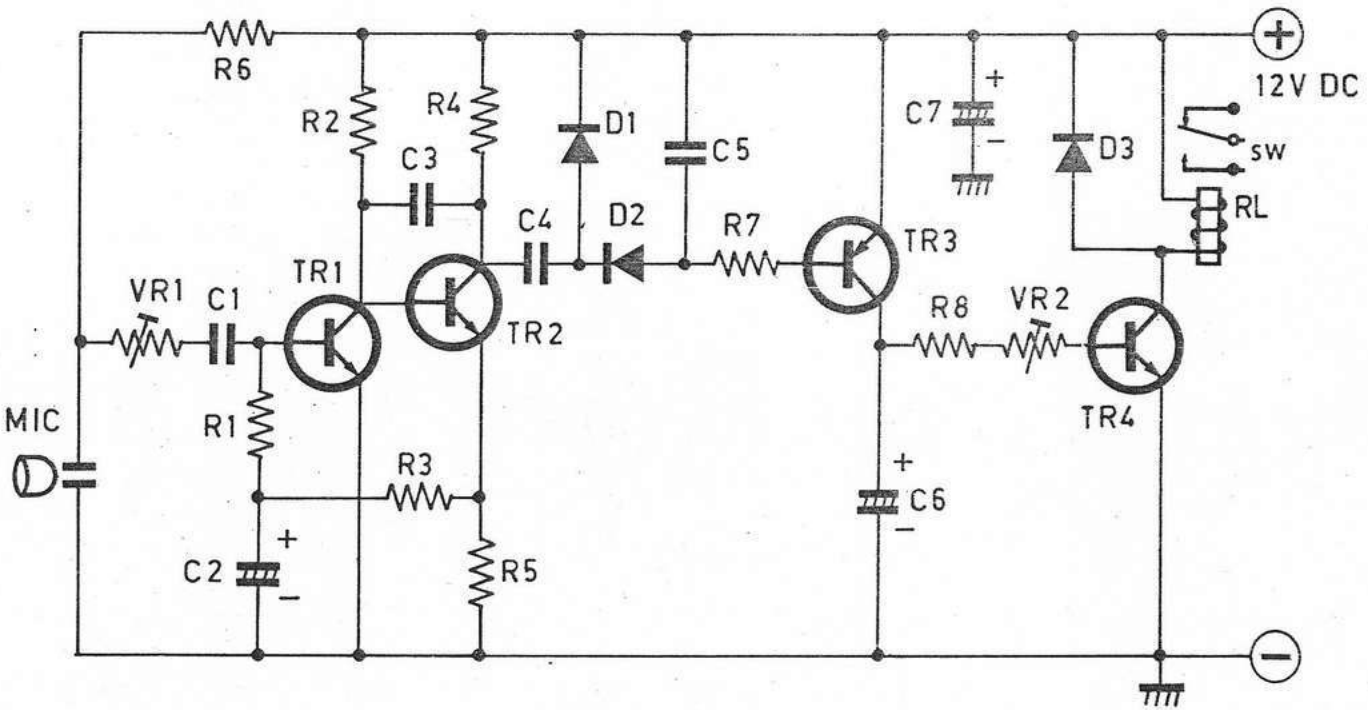

TL-215

CIRCUIT DIAGRAM

TL-216

PARTS LIST

R1.8	.....	100K	R9	.....	1K	D1.2	.....	1N4148
R2	.....	10K	VR	.....	100K	D3.4	.....	1N4002
R3	.....	100	C1.3	.....	2,2KpF	TR1.2.3	.....	CS9014
R4	.....	3,9K	C2.6	.....	1uF	TR4	.....	CS9013
R5	.....	680	C4.5	.....	10KpF	RELAY 12V		
R6	.....	33K	C7	.....	10uF	CONDENSER MIC		
R7	.....	470	C8	.....	47uF	IC	.....	SN7473

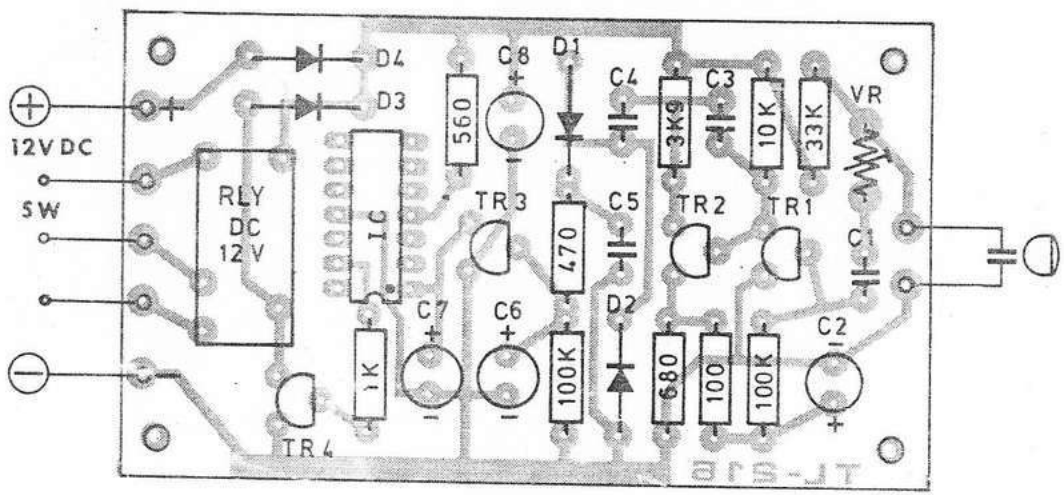

SOUND CONTROL SWITCH

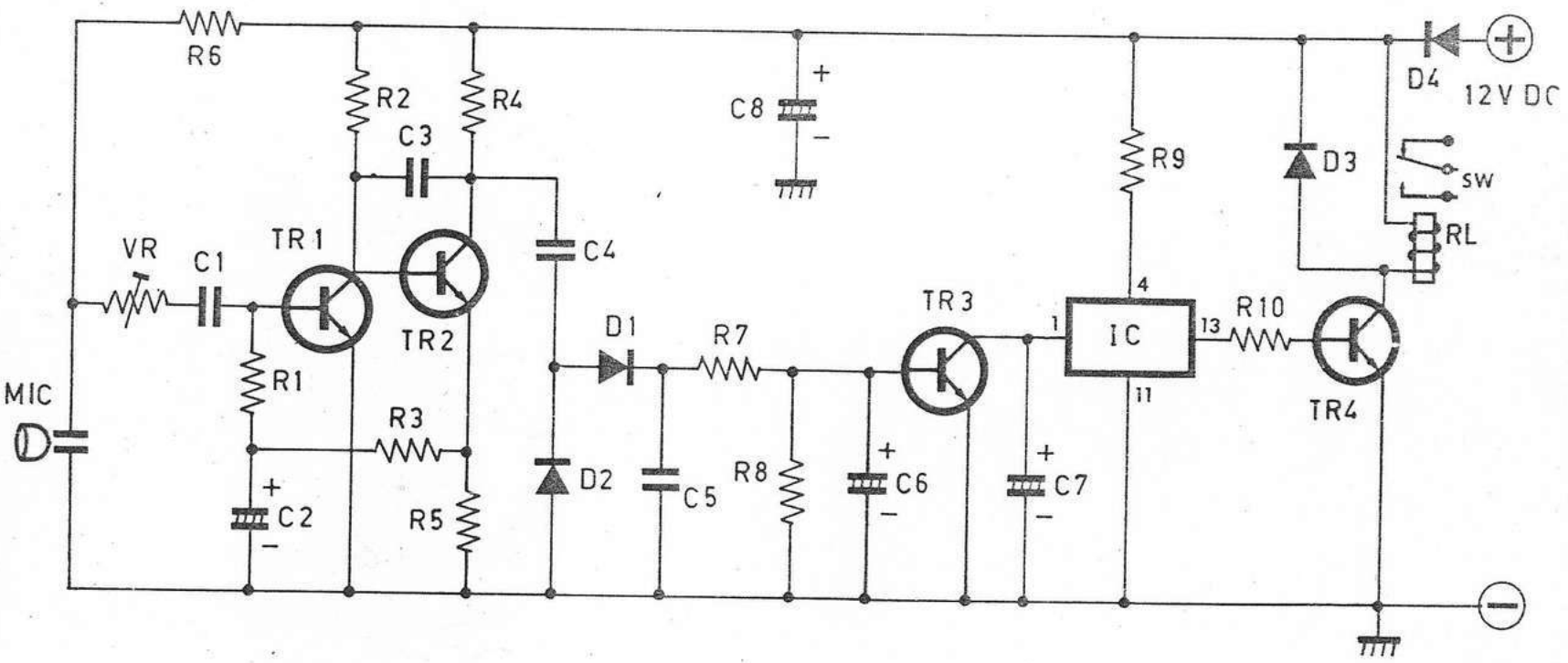

TL-216

CIRCUIT DIAGRAM

TL-231

PARTS LIST

R1	150
R2.5	1K
R3	5,6K
R4	100K
VR1	1M
VR2	10K
C1	100uF
C2	10uF
C3	4,7pF
C4	33KpF
C5.6	33uF
IC	MC1455
D	1N4002
RELAY	6V DC

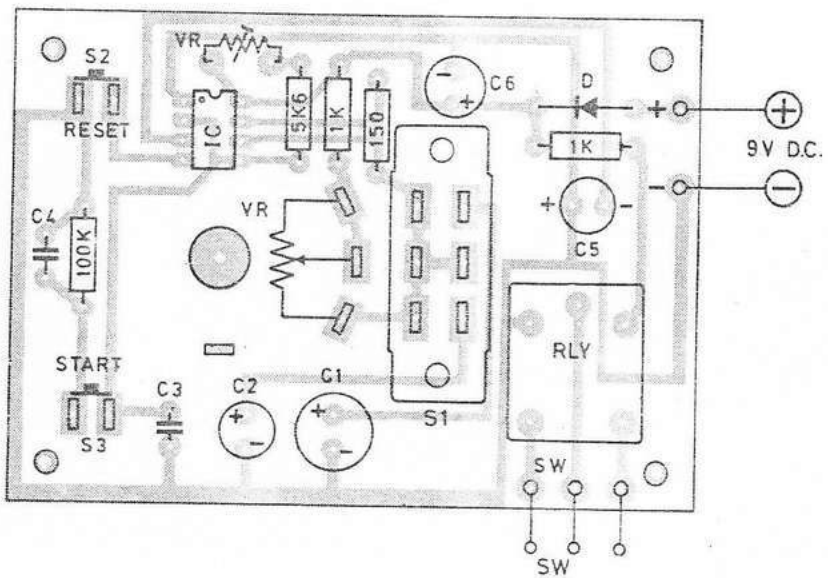

5 MINUTES TIMER SWITCH

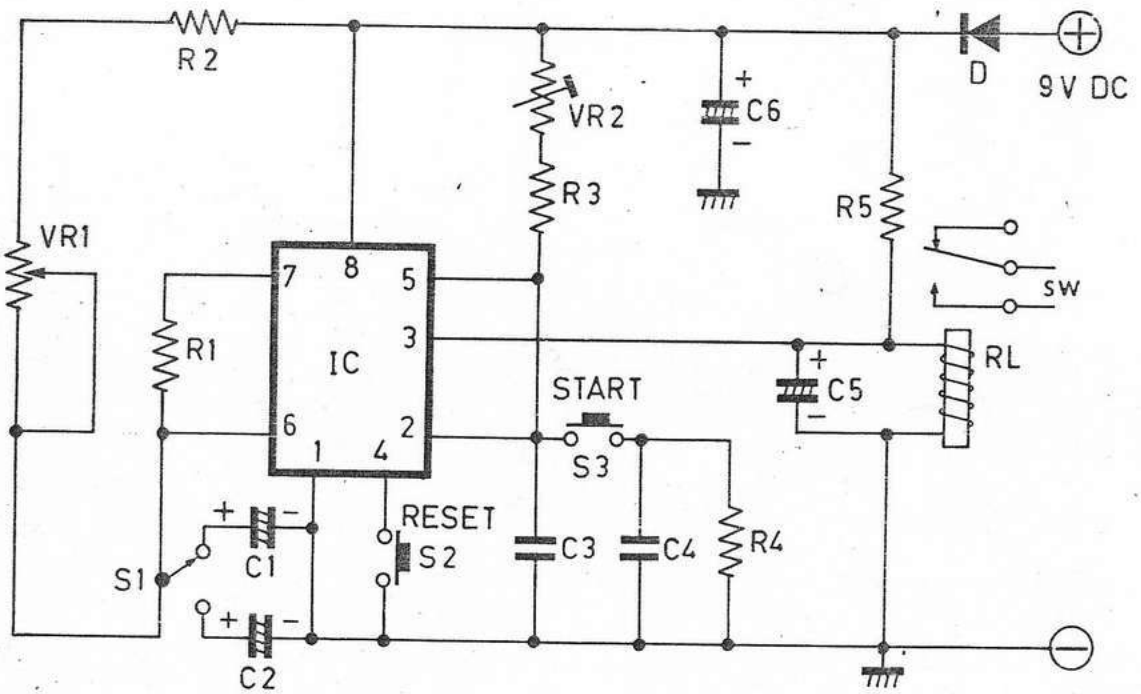

TL-231

CIRCUIT DIAGRAM

TL-301A

PARTS LIST

R1.2 ..... 10K
R3 560
R4 ..... 15K
R5 ..... 100K
R6 ..... 18K

C 1uF

VR 100K

D1–5 ..... LED
D6 ..... 1N4002

I.C LB1405

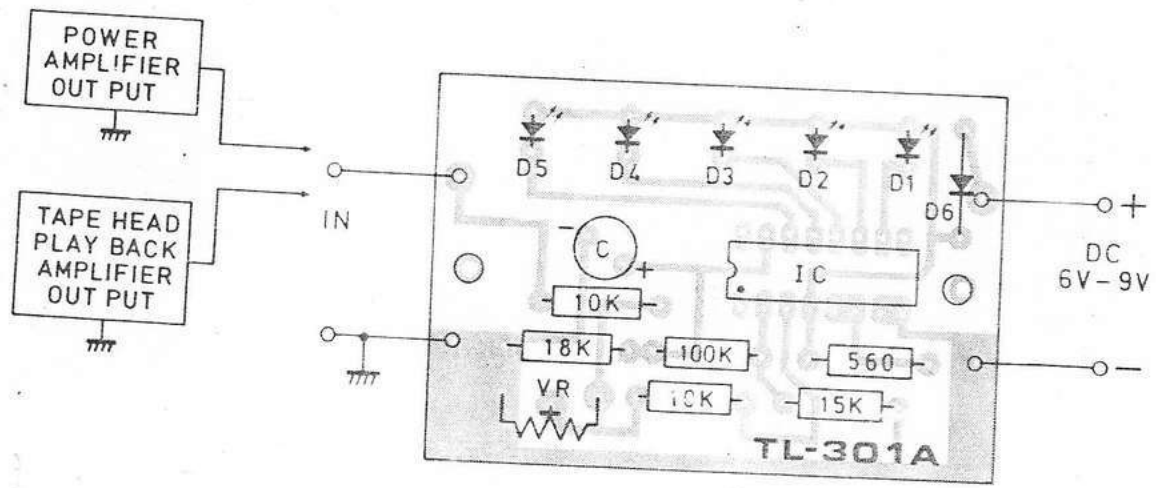

LED VU DISPLAY

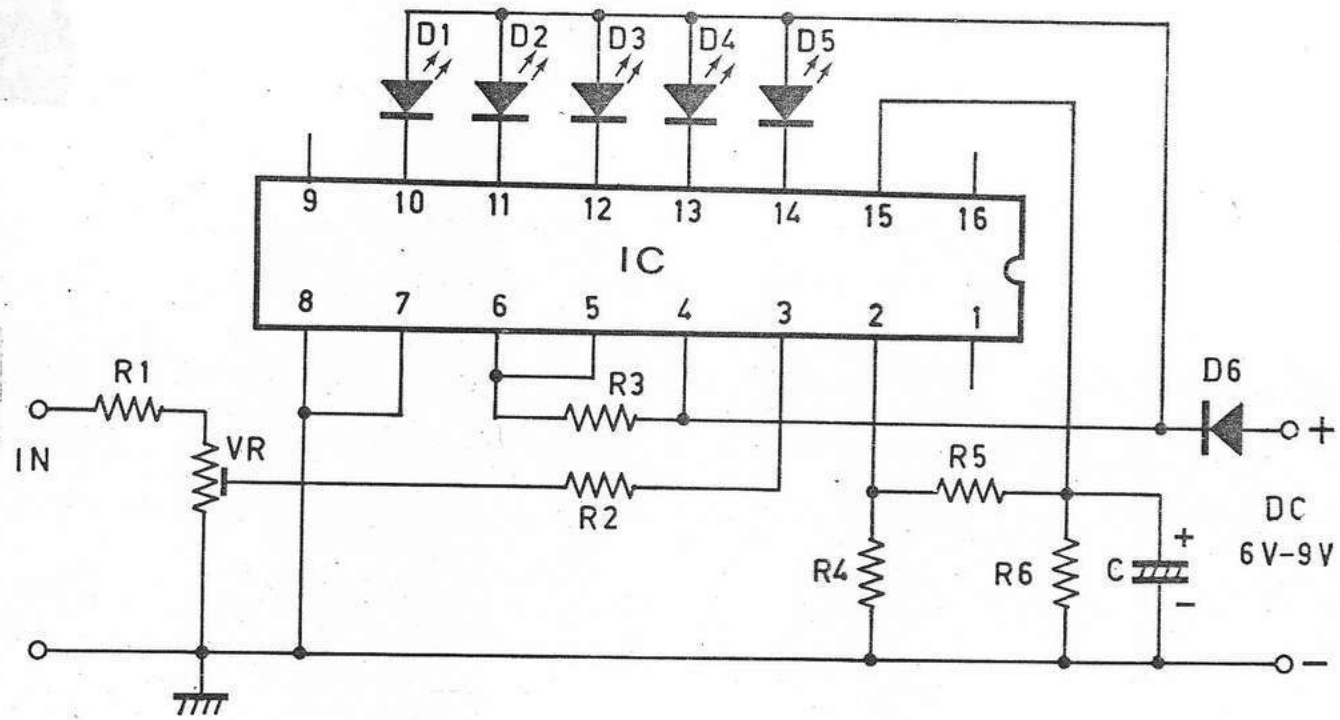

TL-301A

CIRCUIT DIAGRAM

TL-301B

PARTS LIST

R1	100K
R2	10K
R3.5	18K
R4	180K
R6	22K
R7–15	1K
VR	100K
C	10uF
I.C	LB1409
D1–9	LED
D10	1N4002

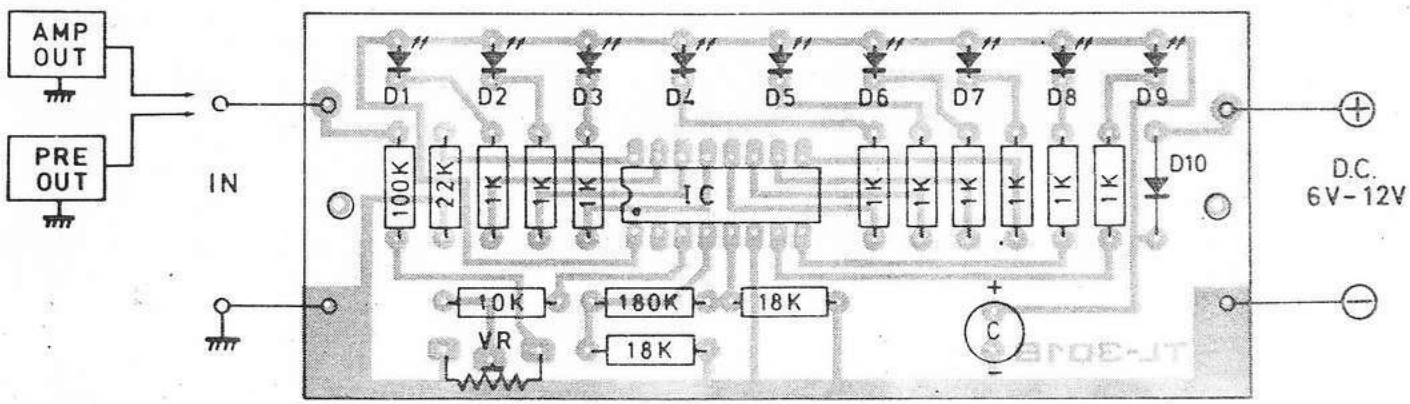

LED VU DISPLAY

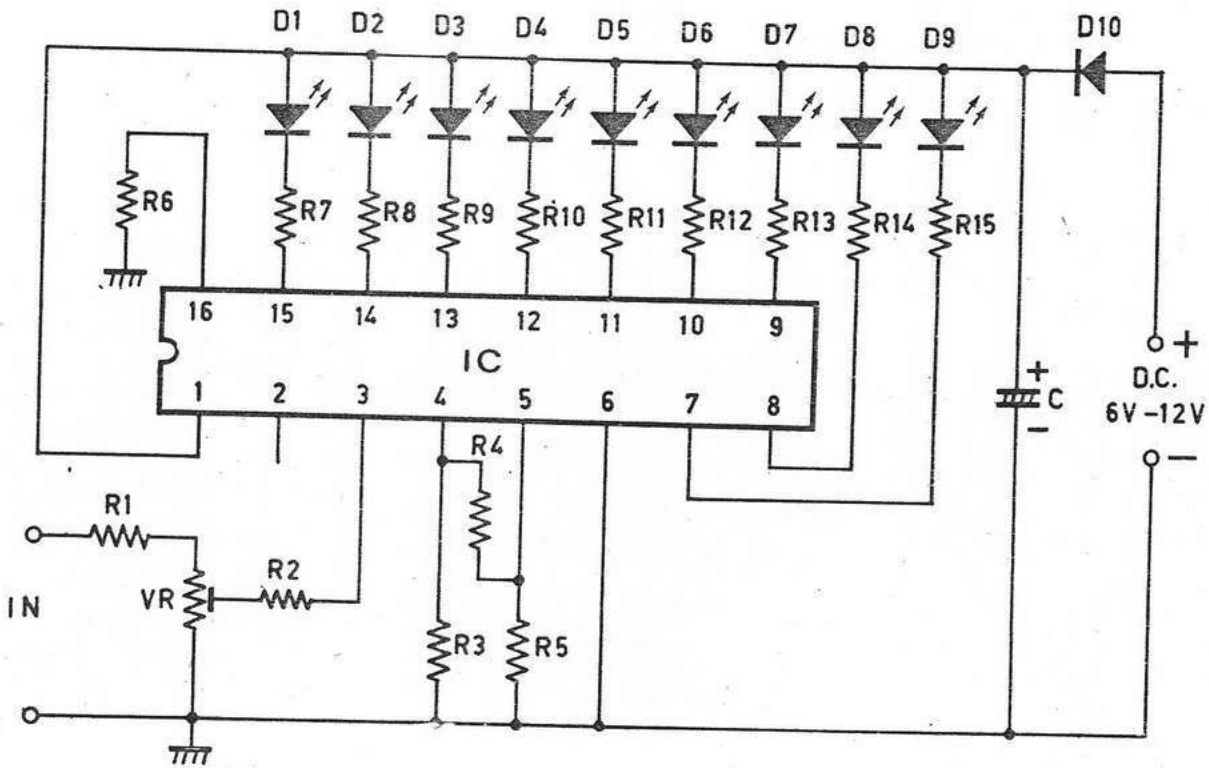

TL-301B

CIRCUIT DIAGRAM

TL-302A

PARTS LIST

R1. 4.	220
R2	33 K
R3	470
VR	47 K
C1	2,2 uF
C2	1 uF
D1–D10	LED
D11	1N4002
IC	LM3915

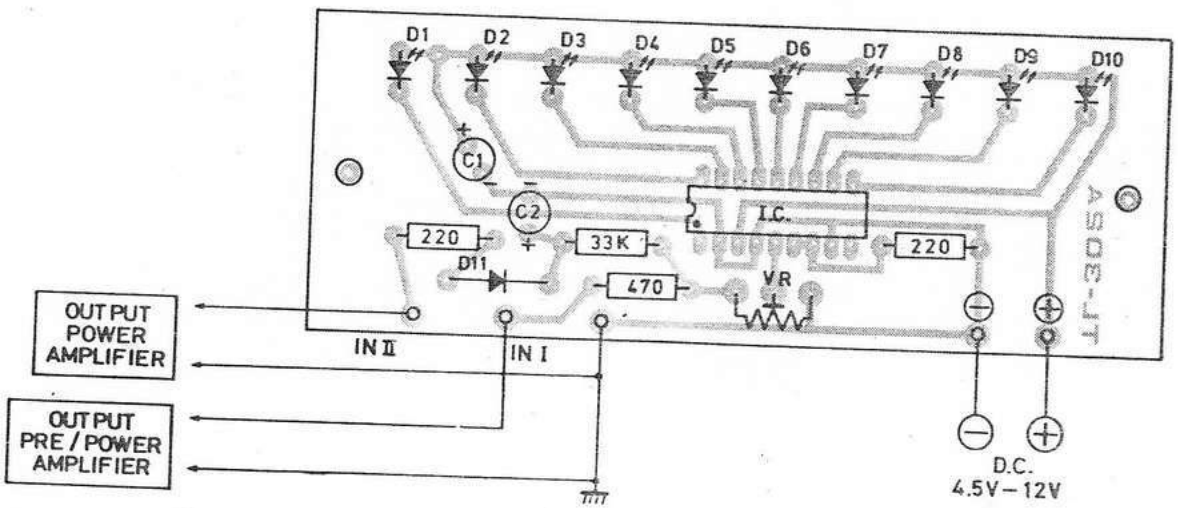

LED VU DISPLAY

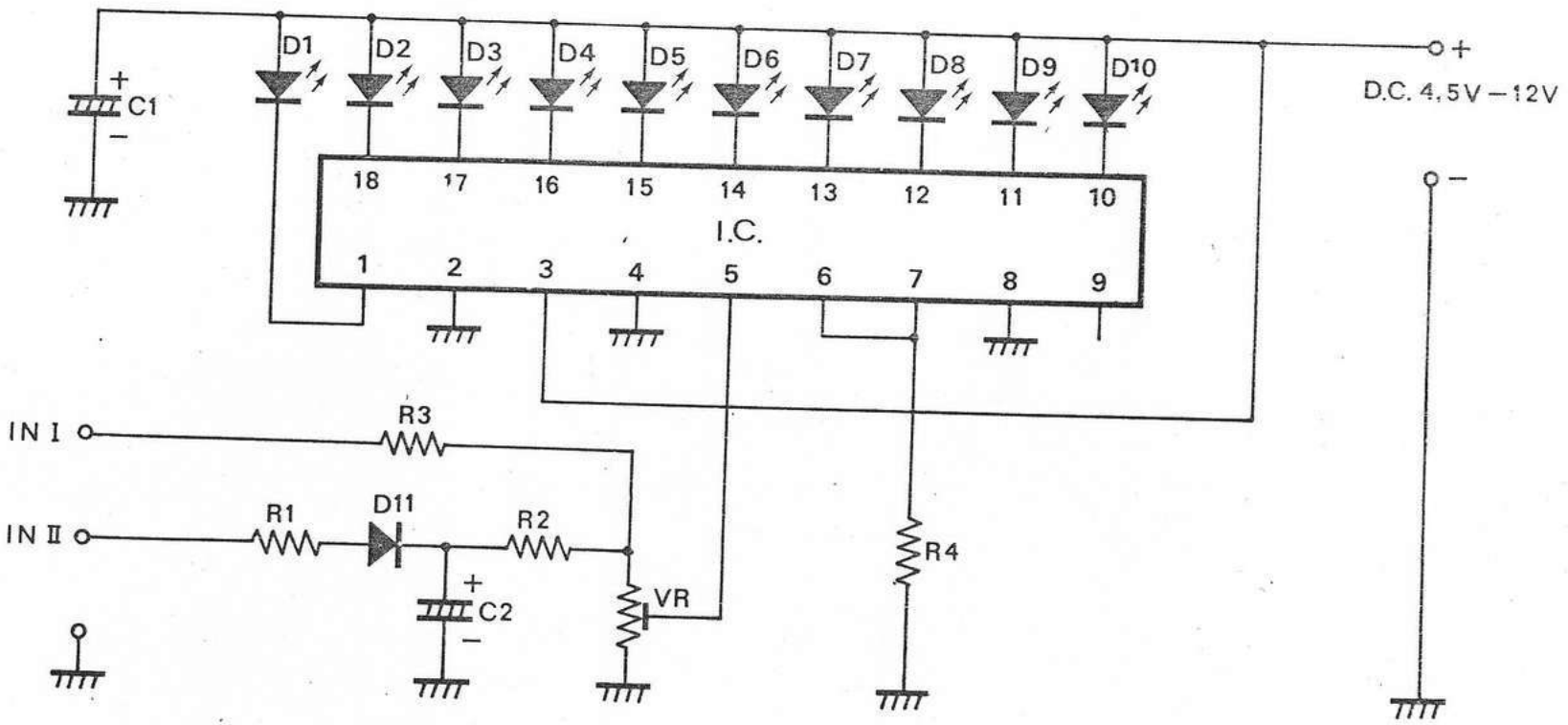

TL-302A

CIRCUIT DIAGRAM

TL-303A

PARTS LIST

R1.2	10
R3	470
R4	390
R5	330
R6	270
R7	180
R8	120
R9	82
R10	56
C1.2	220uF
D1-7	1N4002
D8-13	1N4148
D14-21	LED

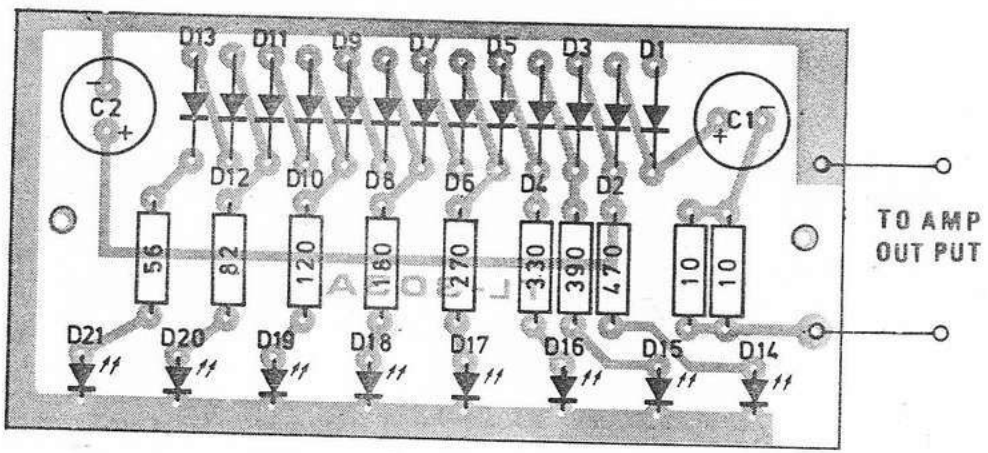

LED VU DISPLAY

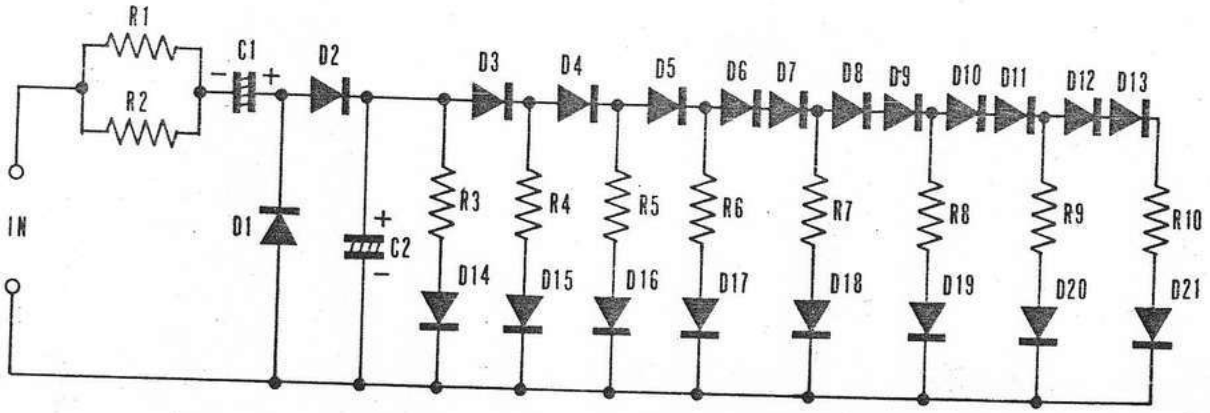

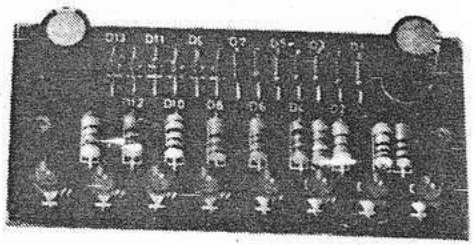

TL-303A

CIRCUIT DIAGRAM

TL-304A

PARTS LIST

R1	1K
R2	1M
R3	15K
R4	33K
R5.6.7	470
R8.9	390
R10.11	330
R12.13	270
R14.15	220

VR	100K
C1.2	1uF
C3.4	10uF
D1.7.8.9.10	1N4148
D2.3.4.5.6	1N4002
D11-20	LED
TR1.2	CS9014
TR3	CS9013

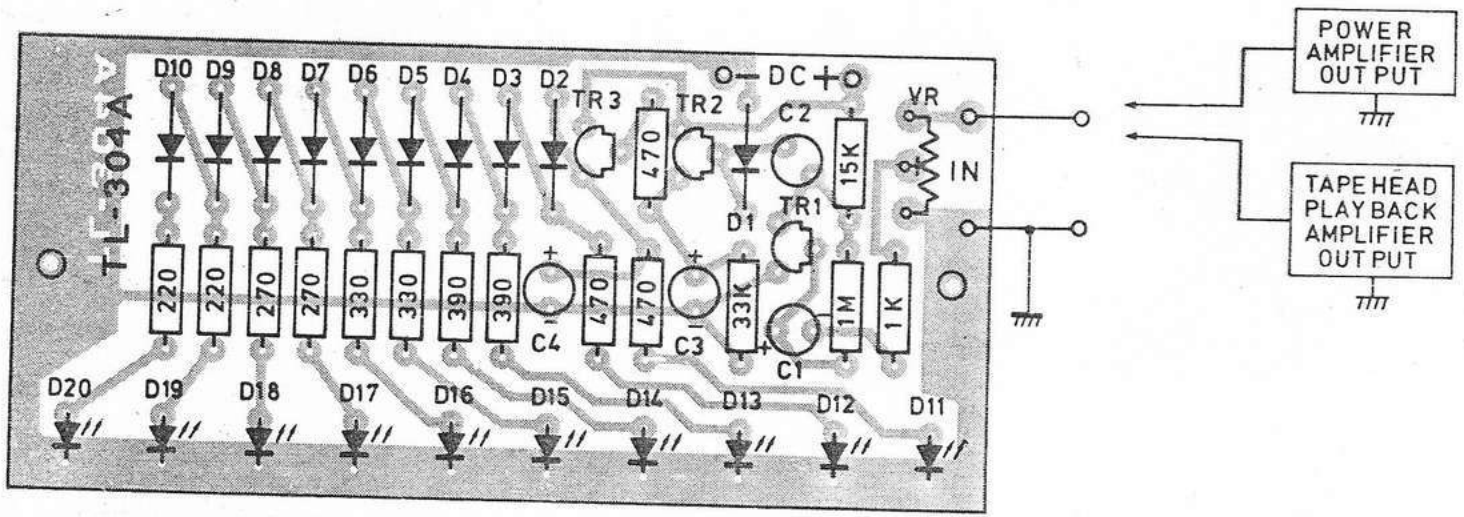

LED VU DISPLAY

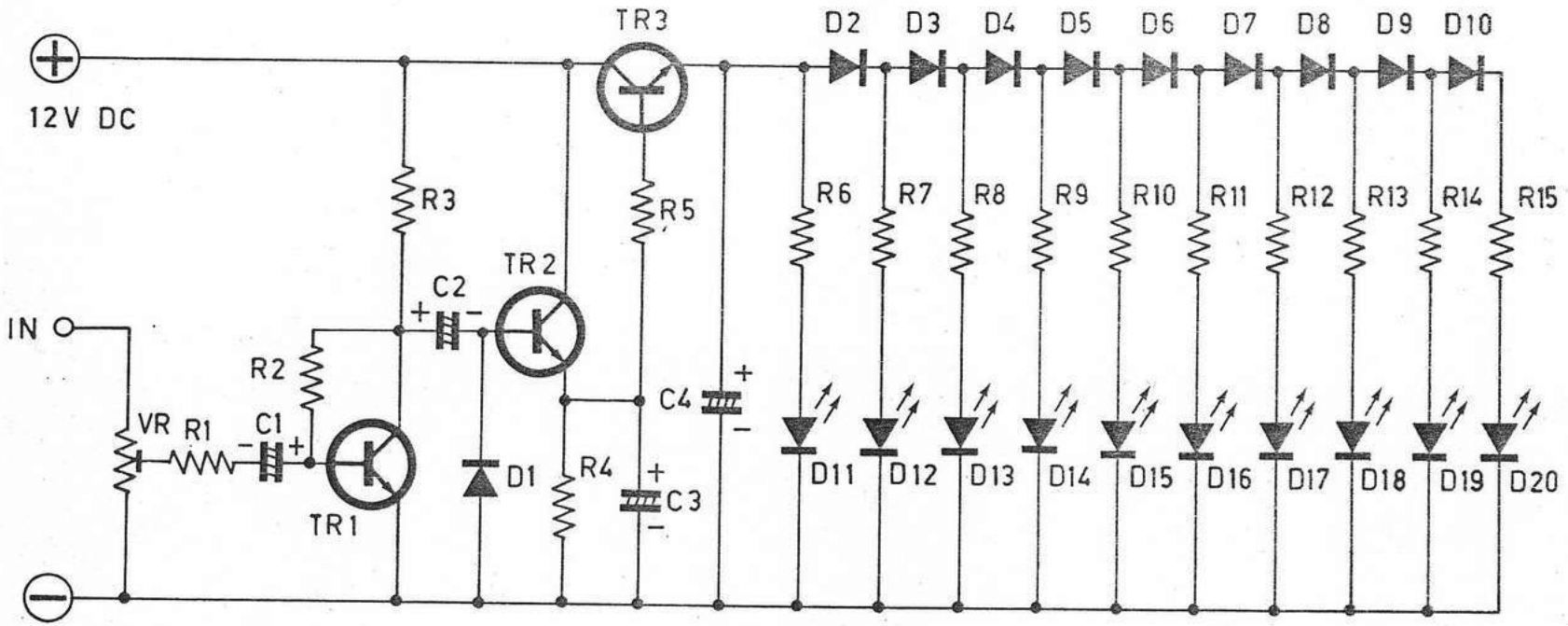

TL-304A

CIRCUIT DIAGRAM

TL-401

PARTS LIST

R1	100K
R2	3,3K
R3.4.5.6.7	47K
R8	150K
VR	47K
C1	33PF
C2.3.8	10uF
C4	1000uF
C5	0,02uF
C6	0,0047uF
C7	100uF
TR1	FCS9012
TR2	FCS9013
I.C.	MN6221
Speaker	2"8Ω

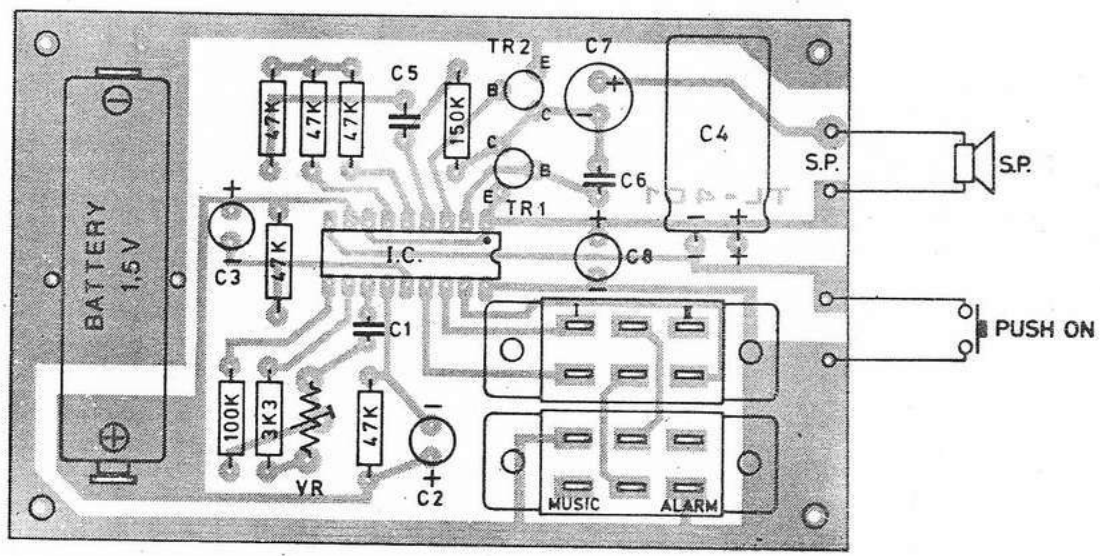

MUSICAL BELL
(BEL MUSIK)

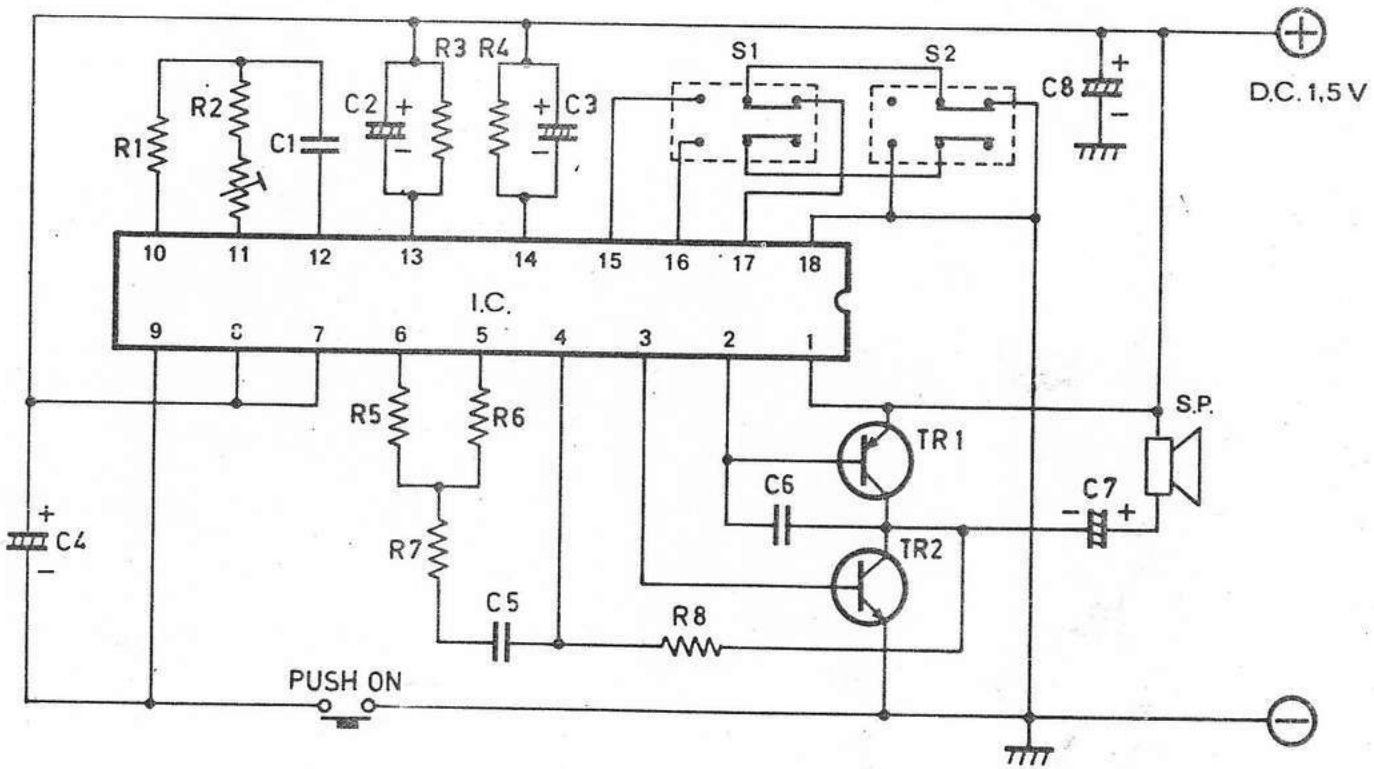

TL-401
CIRCUIT DIAGRAM

TL-402

PARTS LIST

R.1	820K
R.2	47K
R.3	330K
R.4	180K
R.5	100K
R.6	15K
R.7	10K
R.8	10M
VR.1.2	100K
C.1	33pF
C.2.3	150pF
C.4	0,1uF
C.5	10uF
C.6.7	47uF
C.8	0,47uF
TR.1	CS9012
TR.2	CS9013
IC	RX423PC

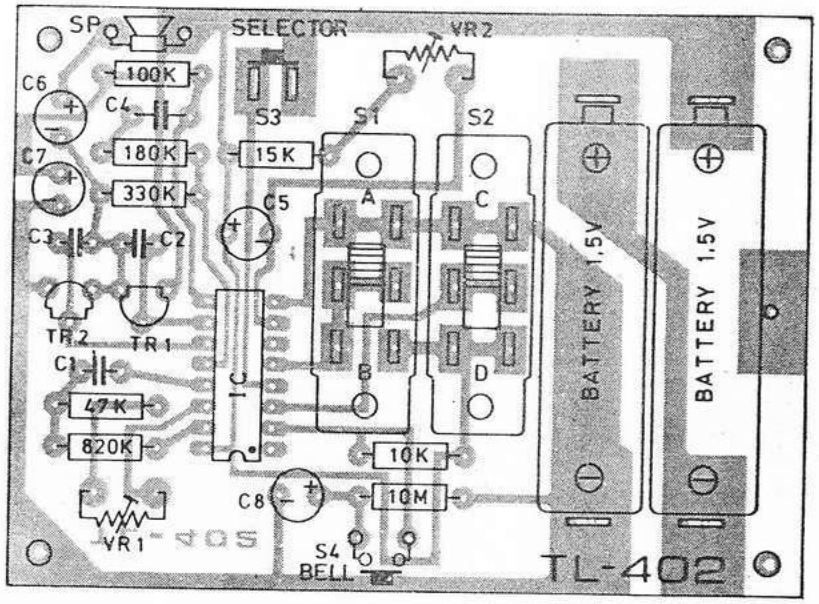

S1 A. Berhenti secara otomatis.
B. Berulang-ulang tak berhenti.

S2 C. Berturut-turut 8 macam lagu.
D. Hanya 1 lagu.

S3 Setiap ditekan berubah 1 lagu.

S4 Start.

MUSICAL BELL
(BEL MUSIK)

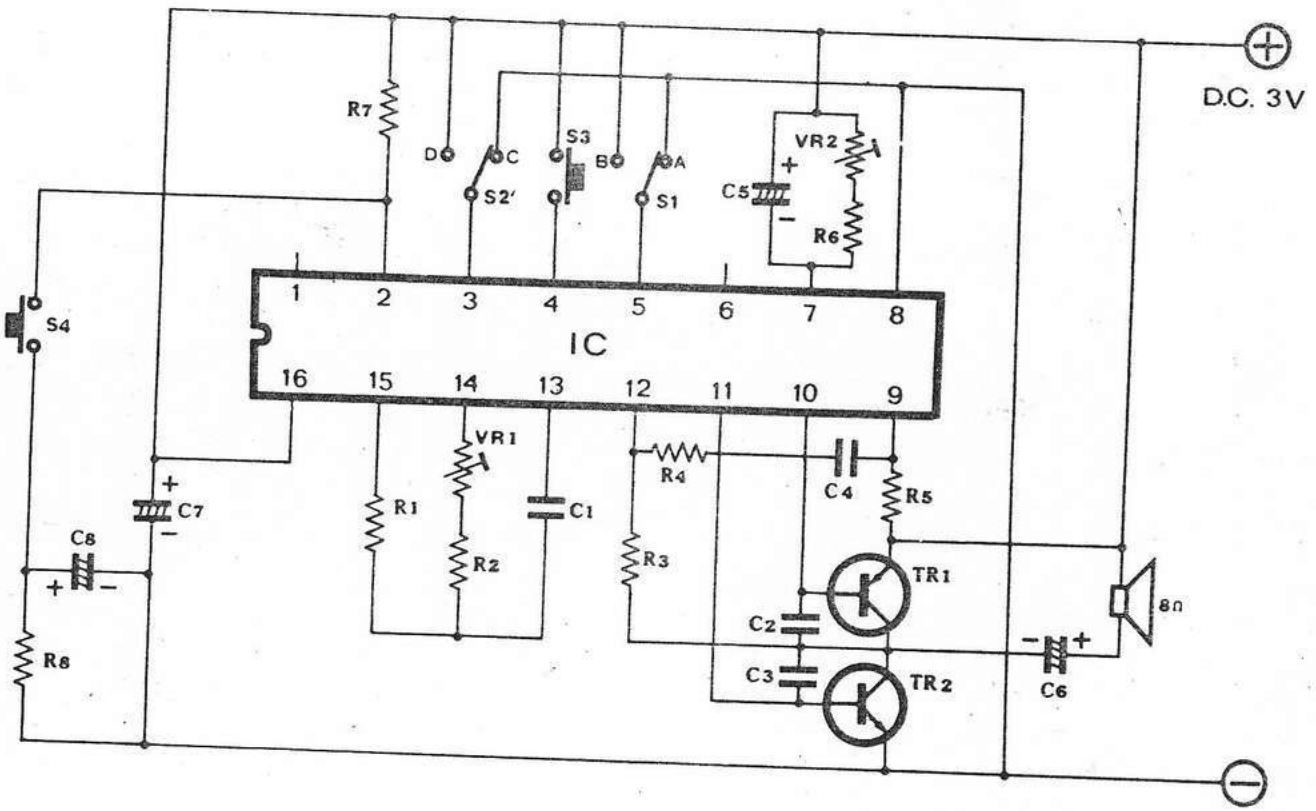

TL-402

CIRCUIT DIAGRAM

TL-402A

PARTS LIST

R.1	2,2K
R.2.7	10K
R.3	3,3K
R.4	47K
R.5	820K
R.6	22K
R.8	10M
R.9	100K
R.10	180K
R.11	330K
R.12	220
VR.1.2	100K
C.1	33pF
C.2.7	10uF
C.3	0,47uF
C.4	0,1uF
C.5.6	150pF
TR.1	2N3569
TR.2	1402D
TR.3	CS9012
TR.4	CS9013
TR.5	C1061
IC	RX423PC
D	1N4002

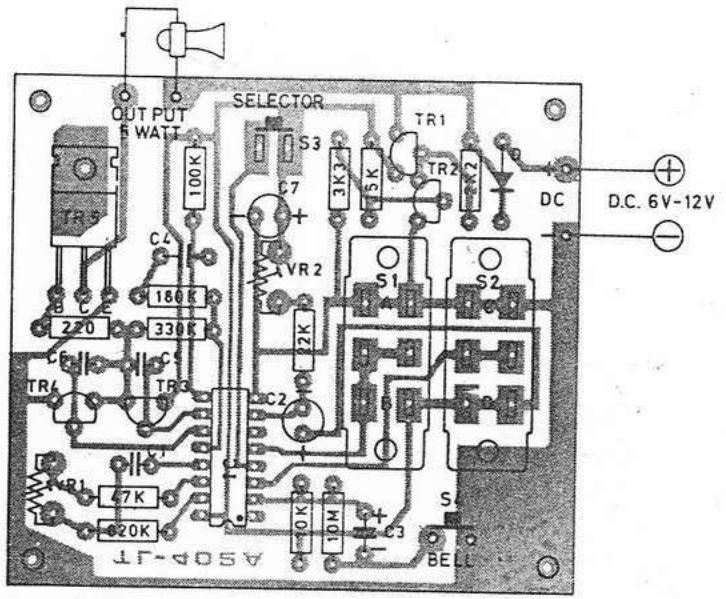

S1 A. Berhenti secara otomatis.
B. Berulang-ulang tak berhenti.

S2 C. Berturut-turut 8 macam lagu.
D. Hanya 1 lagu.

S3 Setiap ditekan berubah 1 lagu.

S4 Start.

MUSICAL BELL
(BEL MUSIK)

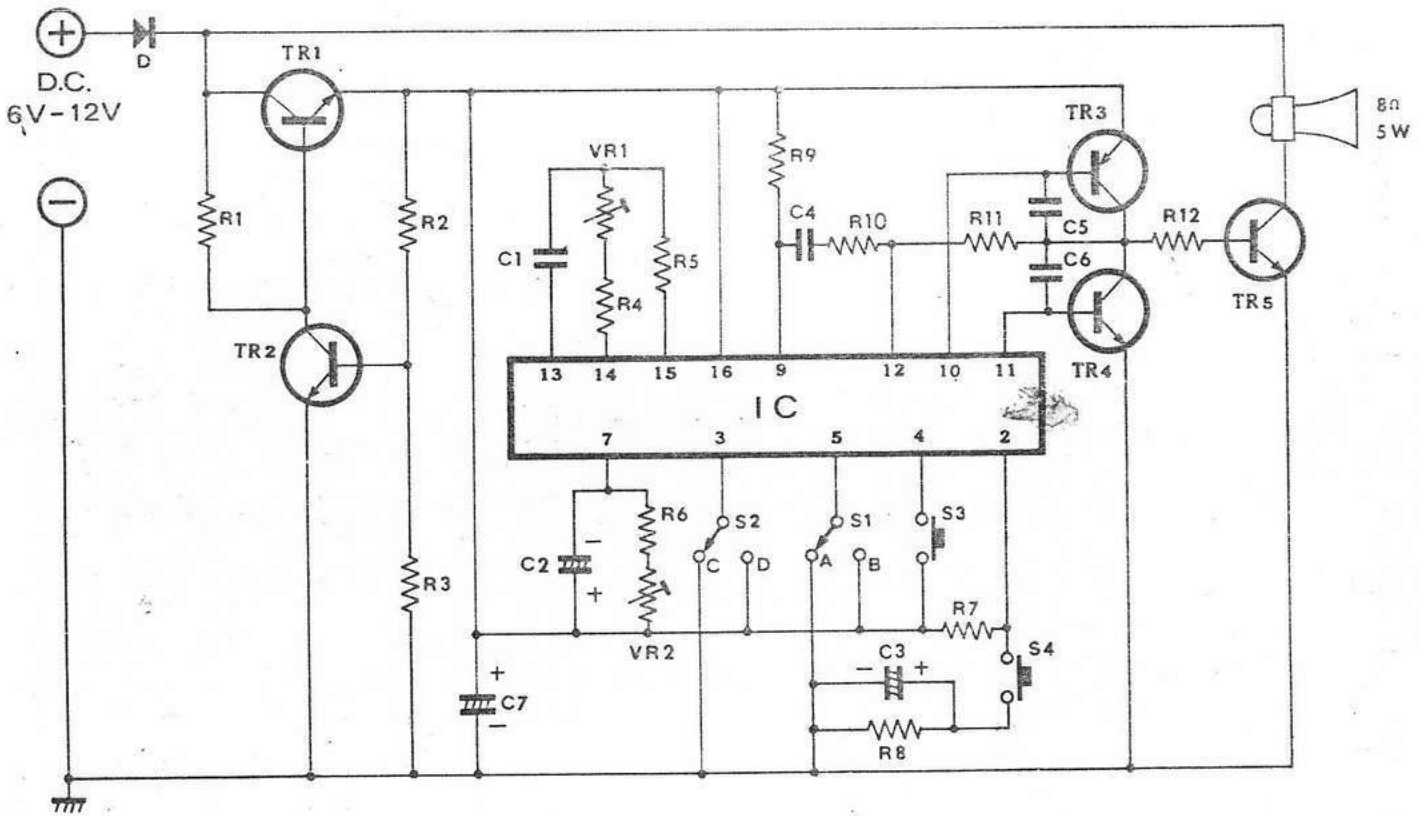

TL-402A

CIRCUIT DIAGRAM

TL-403

PARTS LIST

R1.5	22K
R2.3	4.7K
R4	47K
R6.7.8.9	10K
R10	82K
R11	100
VR	30K
C1	1uF
C2.4	10uF
C3	33pF
TR1	CS9014
TR2	2N4355
TR3	2N3569
IC	RX841PC

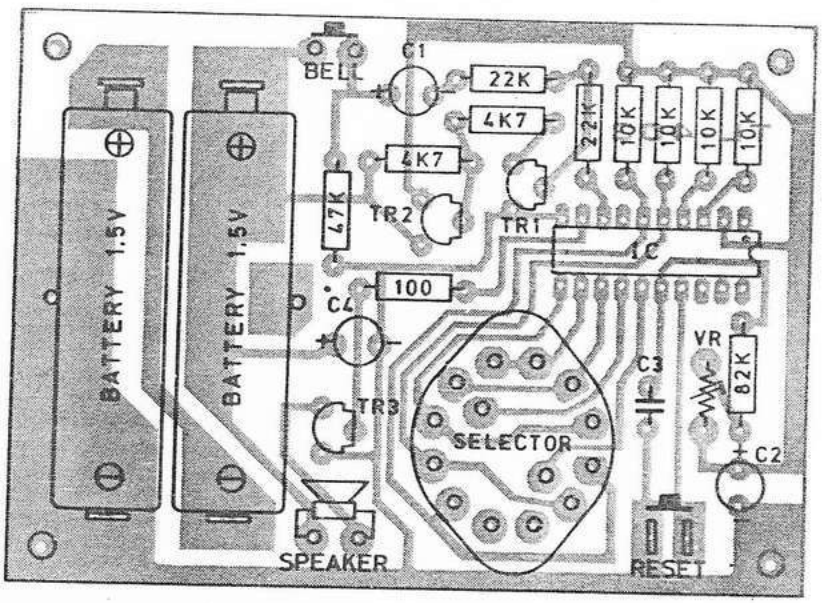

MUSICAL BELL
(BEL MUSIK)

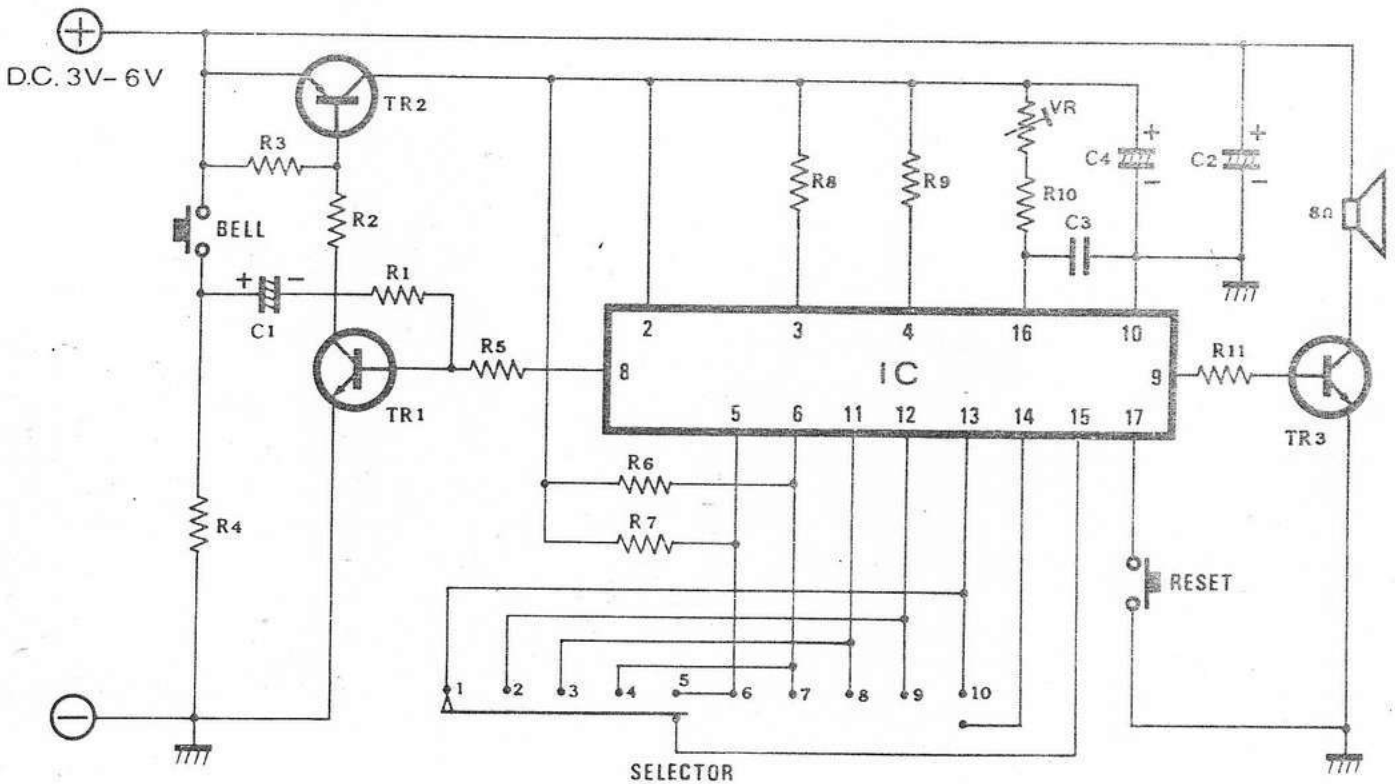

TL-403

CIRCUIT DIAGRAM

TL-403A

PARTS LIST

R1 ..... 2,2K
R2 ..... 47K
R3 ..... 4,7K
R4.5 ..... 1K
R6 ..... 82K
R7.8.9.10 ..... 10K
R11 10
VR 30K

C1 ..... 1uF
C2 ..... 33pF
C3 ..... 10uF

D1 ..... 1N4002
D2 ..... ZD 6V2

TR1 ..... CS9014
TR2 ..... 2N4355
TR3 ..... 2N3569
TR4 ..... C1061
IC RX841PC

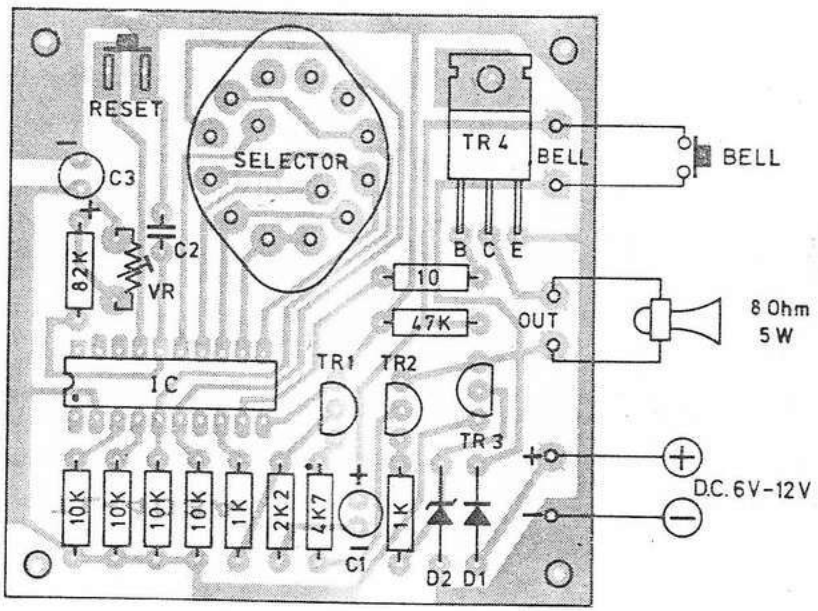

MUSICAL BELL
(BEL MUSIK)

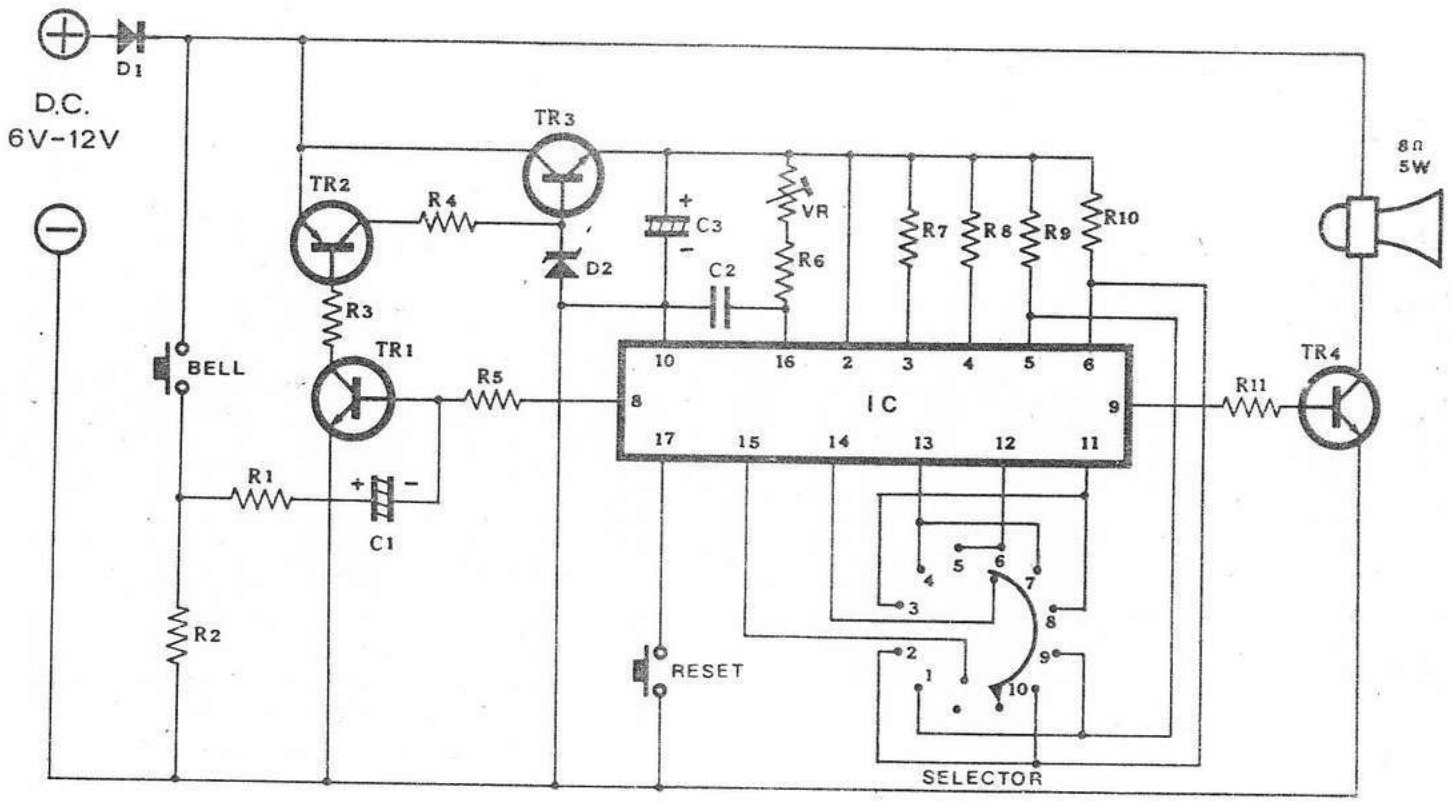

TL-403A

CIRCUIT DIAGRAM

TL-404

PARTS LIST

R1.5 ..... 180K
R2..... 47K
R3..... 82K
R4.....100K
R6.....270K

C1 ..... 33pF
C2.....47KpF
C3.....1uF
C4.....100uF

TR1.....CS9012
TR2.....CS9013
IC CIC281
SP .....Speaker 8 ohm

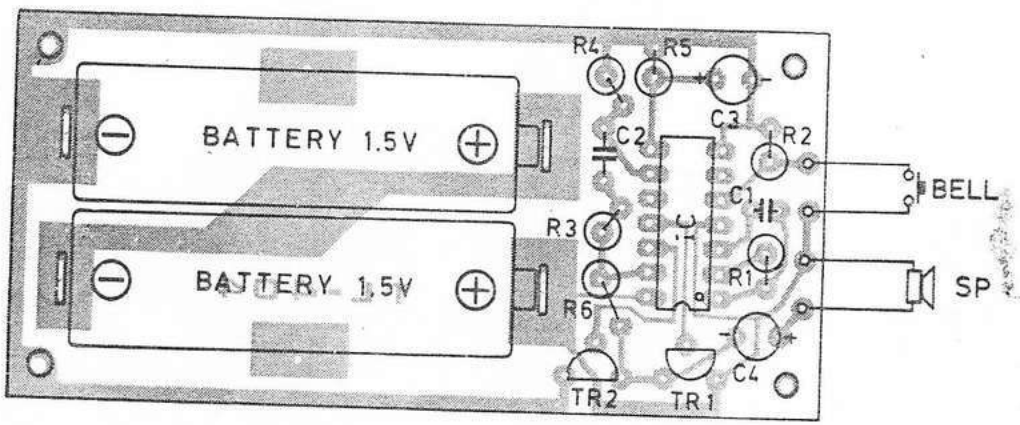

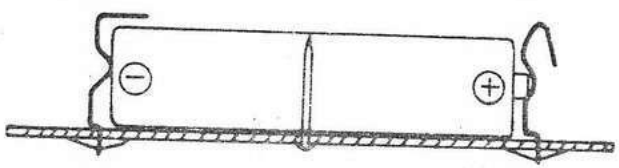

MUSICAL BELL
(BEL MUSIK)

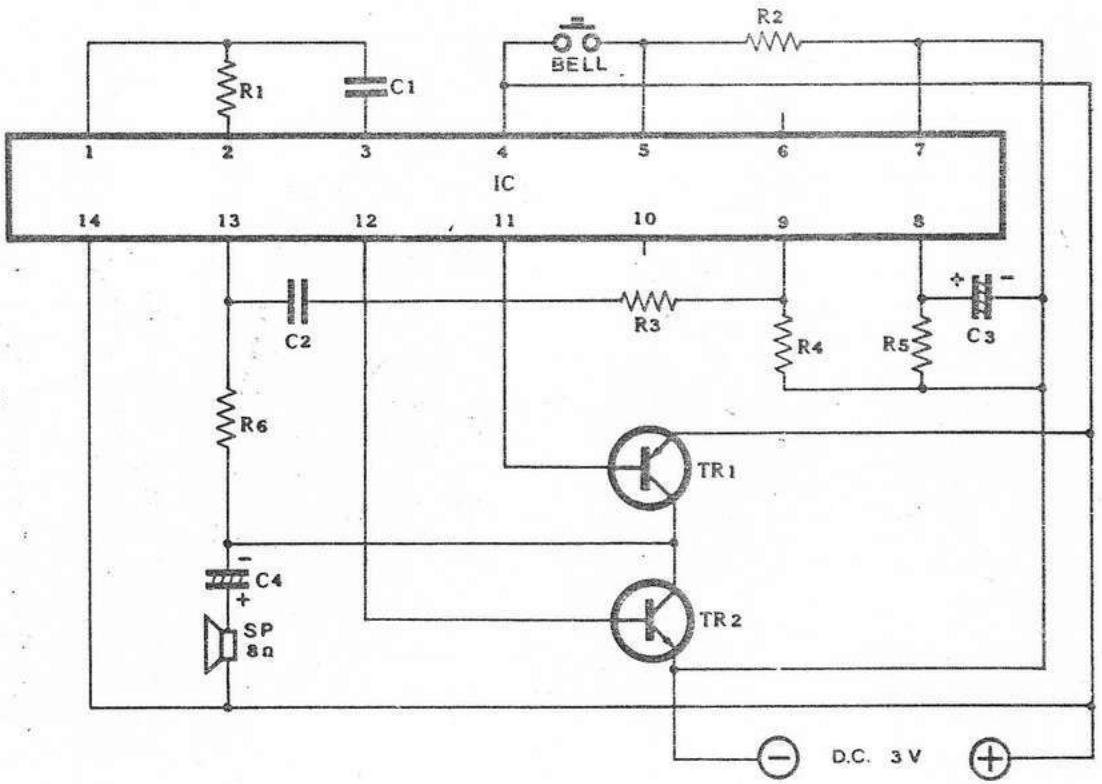

TL-404

CIRCUIT DIAGRAM

TL-601

PARTS LIST

R1.4.5.6.7.8.9.10.11.	1K
R.2.3.	10K
C1	100uF
C.2.3.	1uF

D1	1N4002
D2 – 10	1N4148
D11 – 17	LED
IC	MC14017B
TR1.2.	CS9014

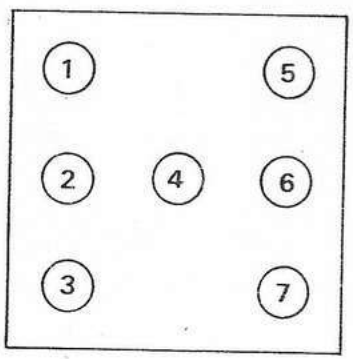

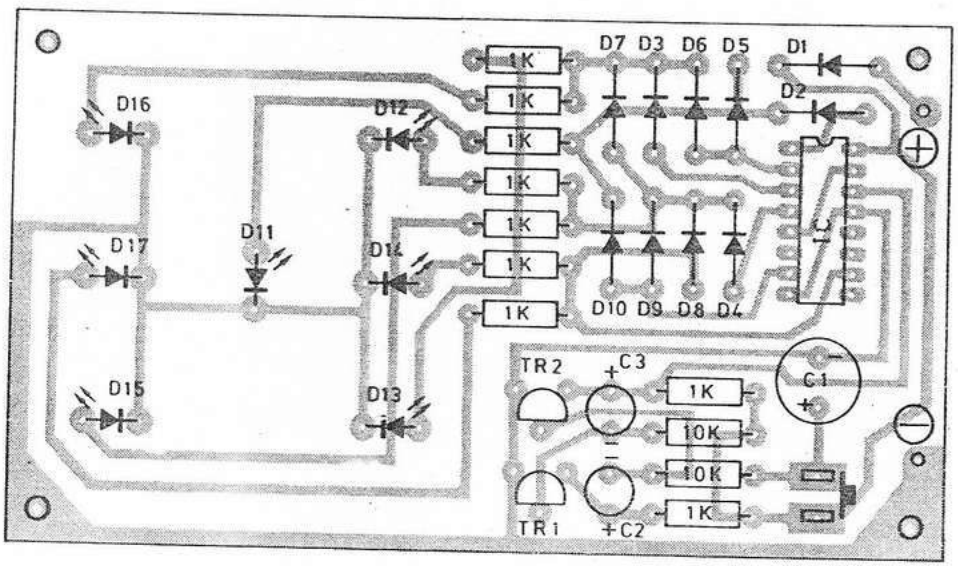

ELECTRONIC DICE
(DADU LED)

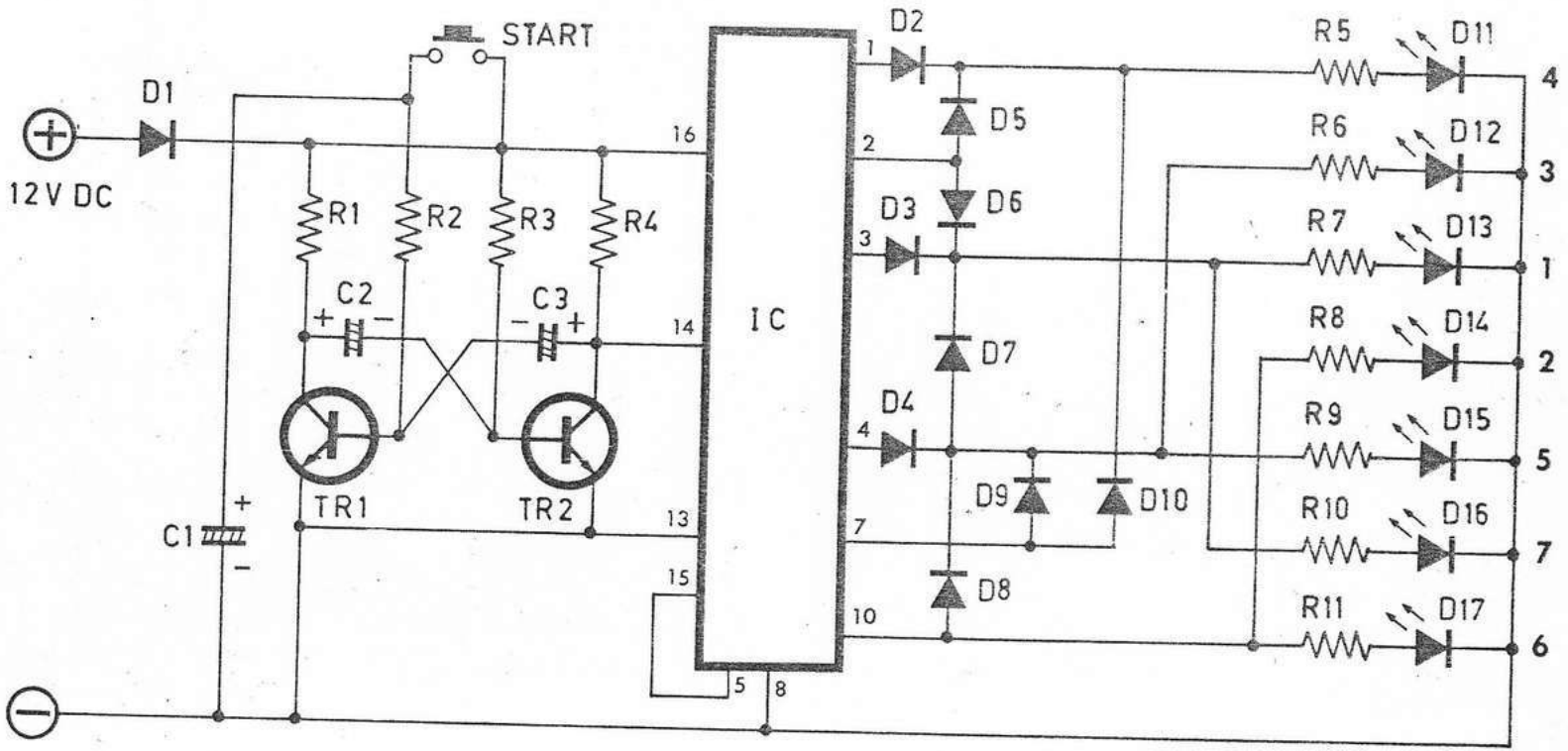

TL-601
CIRCUIT DIAGRAM

TL-602

PARTS LIST

R1	10
R2	5,6K
C1	220pF
C2.5.6	100uF
C3	47KpF
C4	100KpF
IC	LM386
TRANSFORMER	1 : 25
SPEAKER	2" 8 ohm.

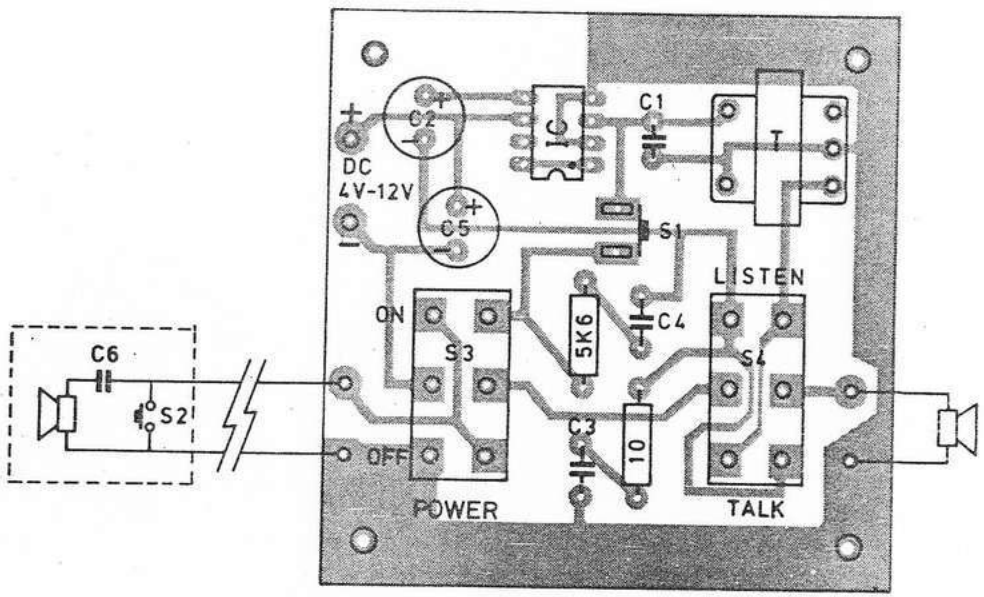

INTERCOM

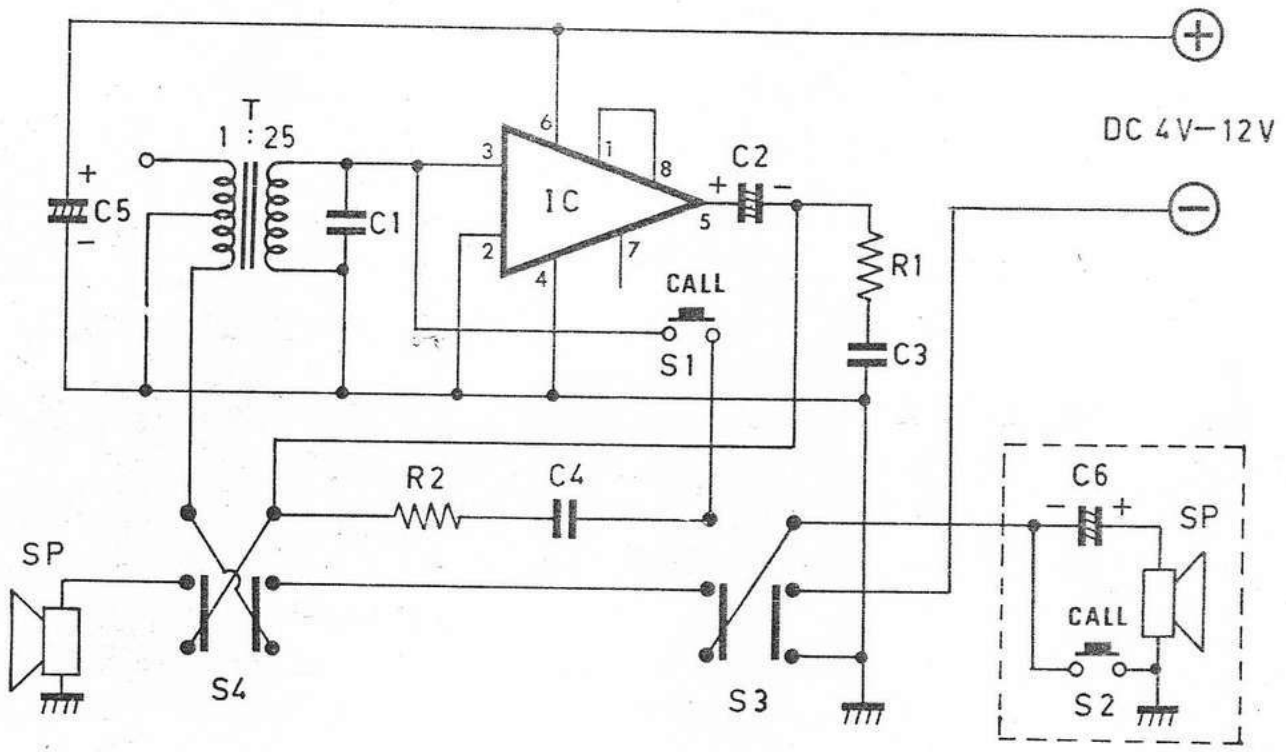

TL-602

CIRCUIT DIAGRAM

TL-703

PARTS LIST

R1	0.22
R2.3.7	100K
R4.8	10K
R5	2,2K
R6	47
R9	3,3K
VR	5K
C1	10uF
C2	470pF
TR1	CS9015
TR2	A 671 ×
TR3	2N3055
IC	LM723

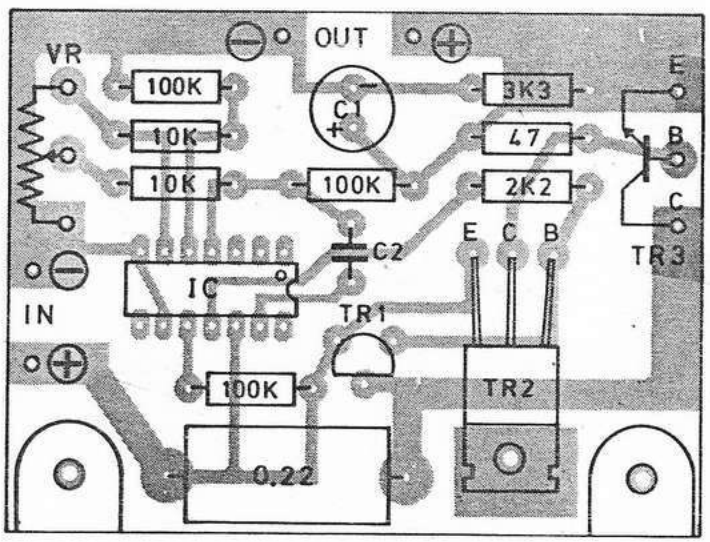

0-30V 2,5A DC REGULATOR

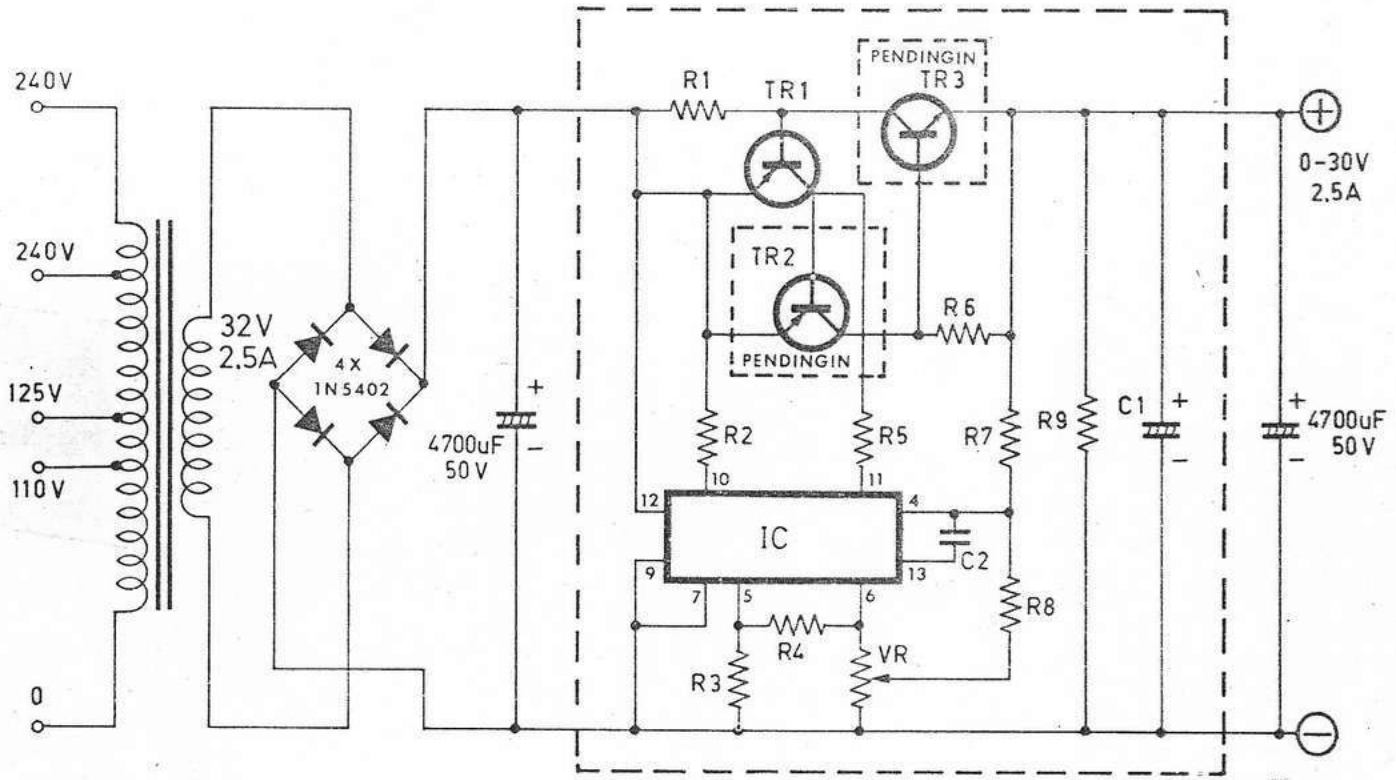

TL-703

CIRCUIT DIAGRAM

TL - 706

PARTS LIST

R1.2.3. ..... 2,2K
VR 3K

C1.2 ..... 10uF
C3 ..... 0,1uF

TR 2N3055
IC uA78G

UNTUK BEBAN 3A :
TRAFO SEKUNDER 16V3A
UNTUK BEBAN 6A :
TRAFO SEKUNDER 18V6A
TR 2X2N3055 DI PARALEL.

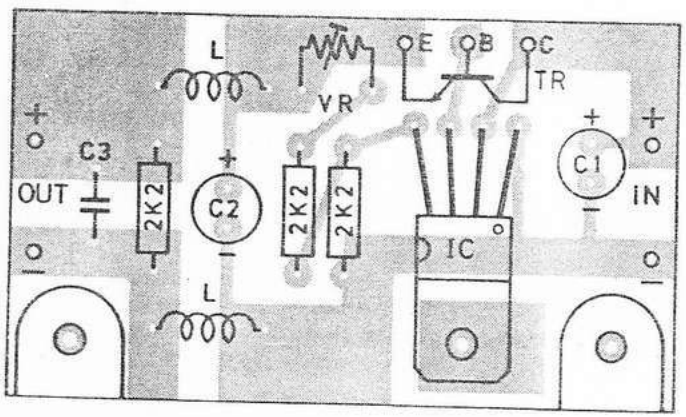

10V-15V 3A-6A D C REGULATOR

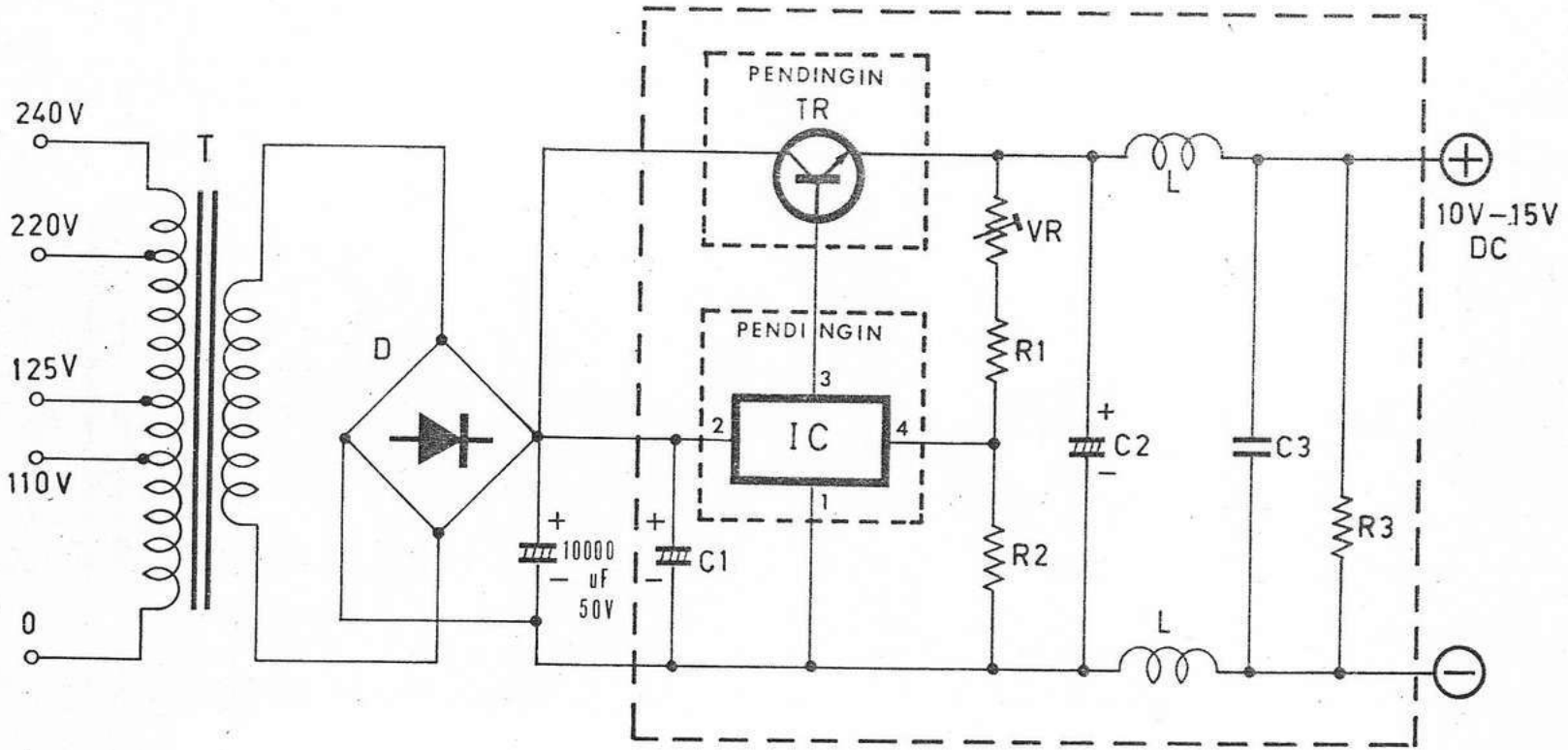

TL-706

CIRCUIT DIAGRAM

TL-710

PARTS LIST

R1.2.3.4.5.	0,22/5W
R6.8.12.	100K
R7.15.	2,2K
R9.11	10K
R10	12K
R13.14.	47
VR	5K
C1	470pF
C2	100uF
C3	0,1uF
TR1	CS9015
TR2	A671
TR3	C1061
TR4.5.6.7.	2N3055

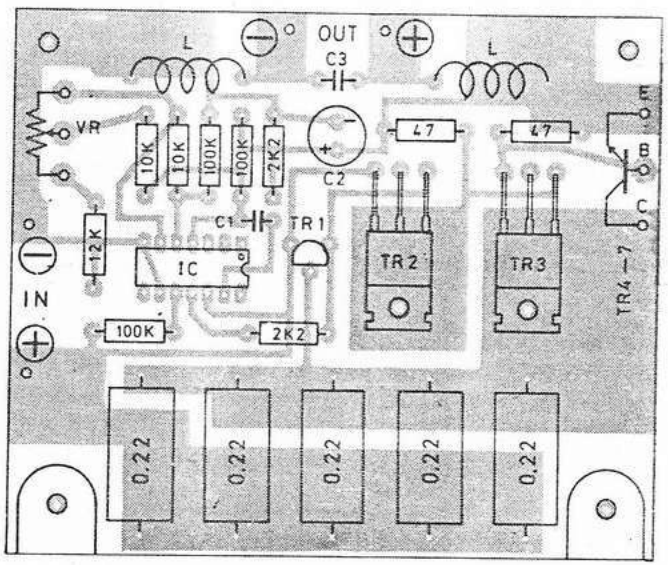

0-15V 10A DC REGULATOR

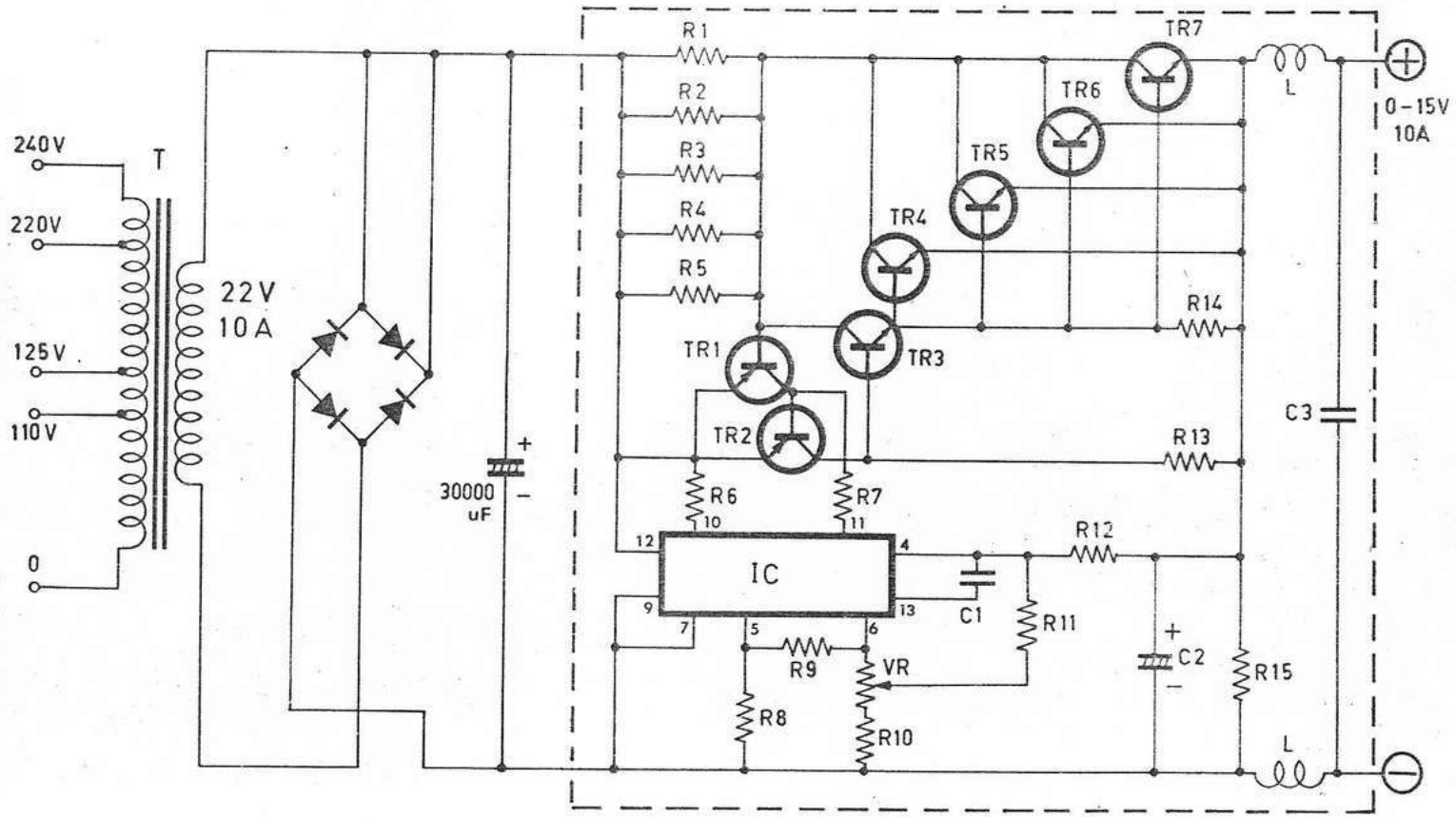

TL-710

CIRCUIT DIAGRAM

TL-801

PARTS LIST

R1.2.8. ..... 1K
R3.7.9..... 10K
R4..... 82
R5 ..... 180K
R6 ..... 68K
R10 820
R11 ..... 4,7K

VR1.2 ..... 5K

C1.2.3 ..... 100uF25V
C4. 6..... 10uF16V
C5..... 33uF16V
C7..... 100uF50V

D1.2.3.4.5.6 ..... 1N4148
D7..... LED
D8.9 ..... 1N4002
D10. ..... ZD 12V

TR1.2.4.5 ..... CS9014
TR3 ..... 2N3569
TR6 ..... C 1061

RL ..... RELAY. 12VDC

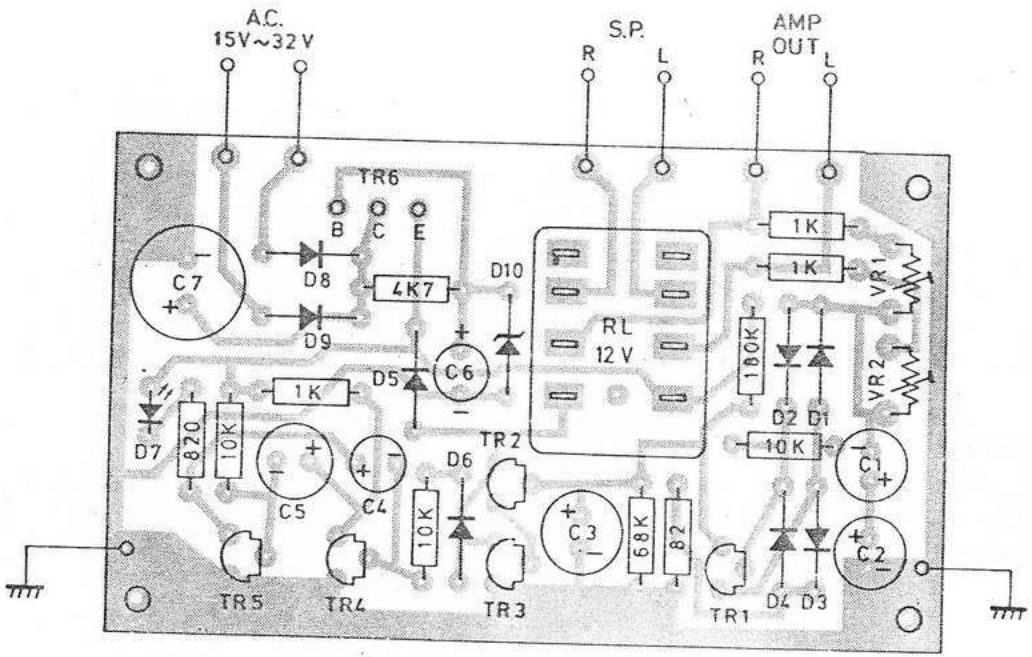

SPEAKER PROTECTOR
(PENGAMAN SPEAKER)

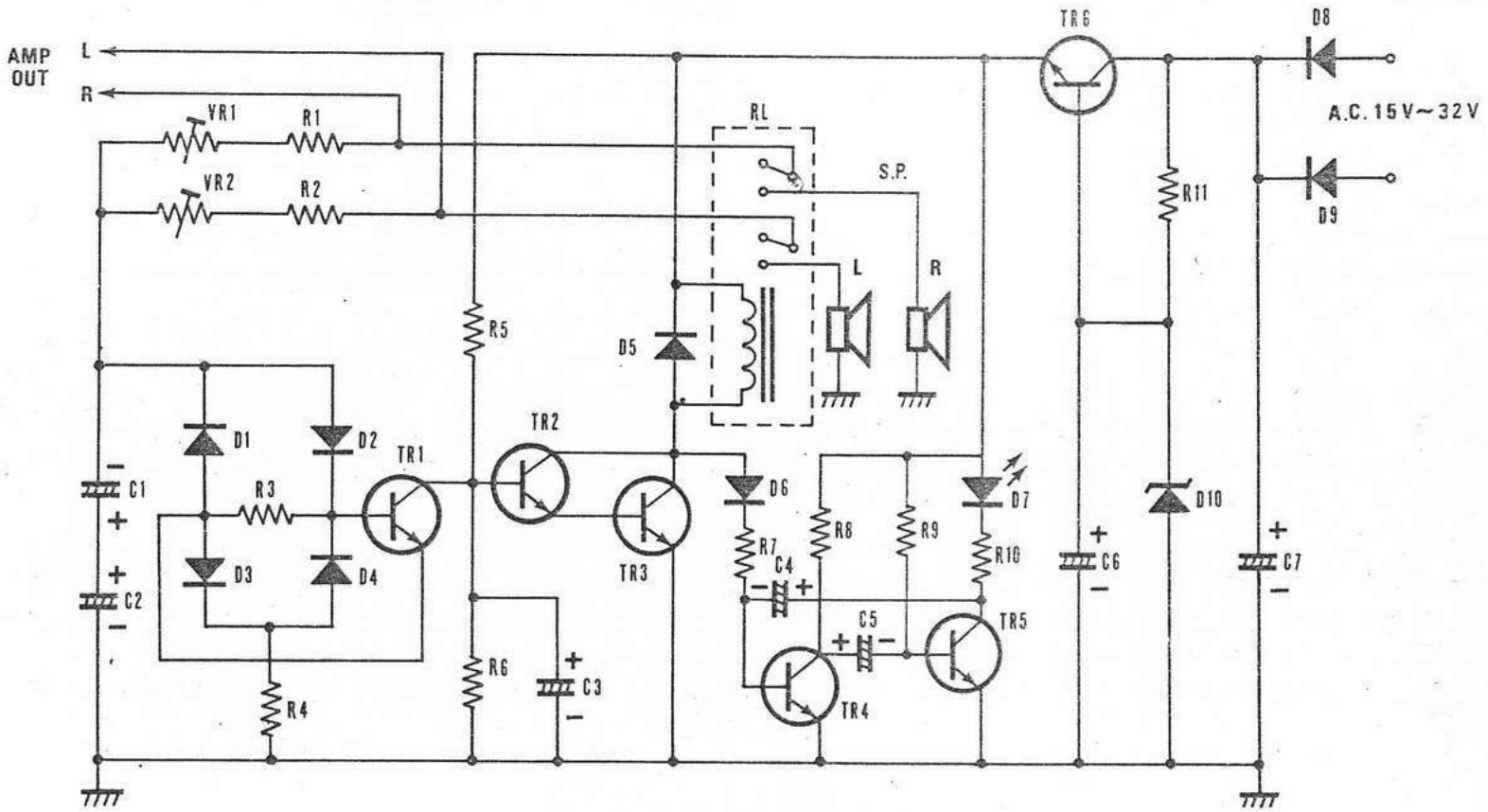

TL-801

CIRCUIT DIAGRAM

TL-1002A

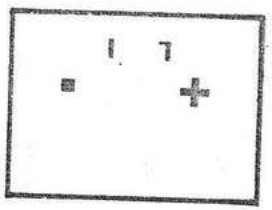

One-Player Target

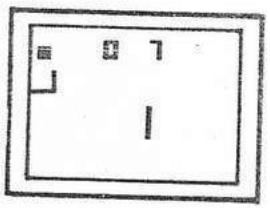

Basketball Practice

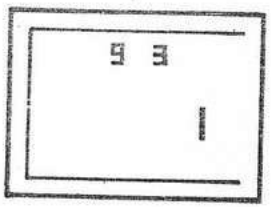

Practice

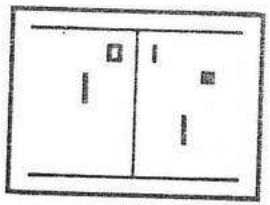

Tennis

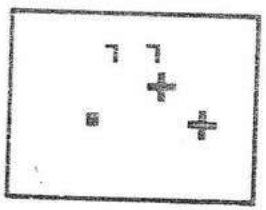

Two-Player Target

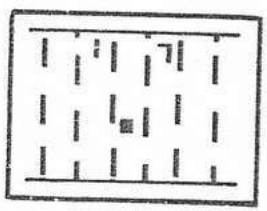

Gridball

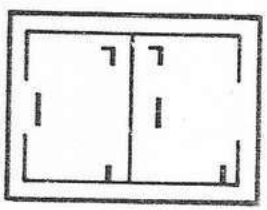

Soccer

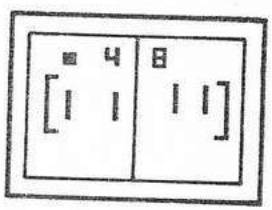

Hockey

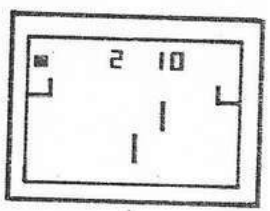

Basketball

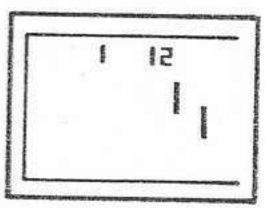

Squash

T.V. GAME

TL-1002A

CIRCUIT DIAGRAM

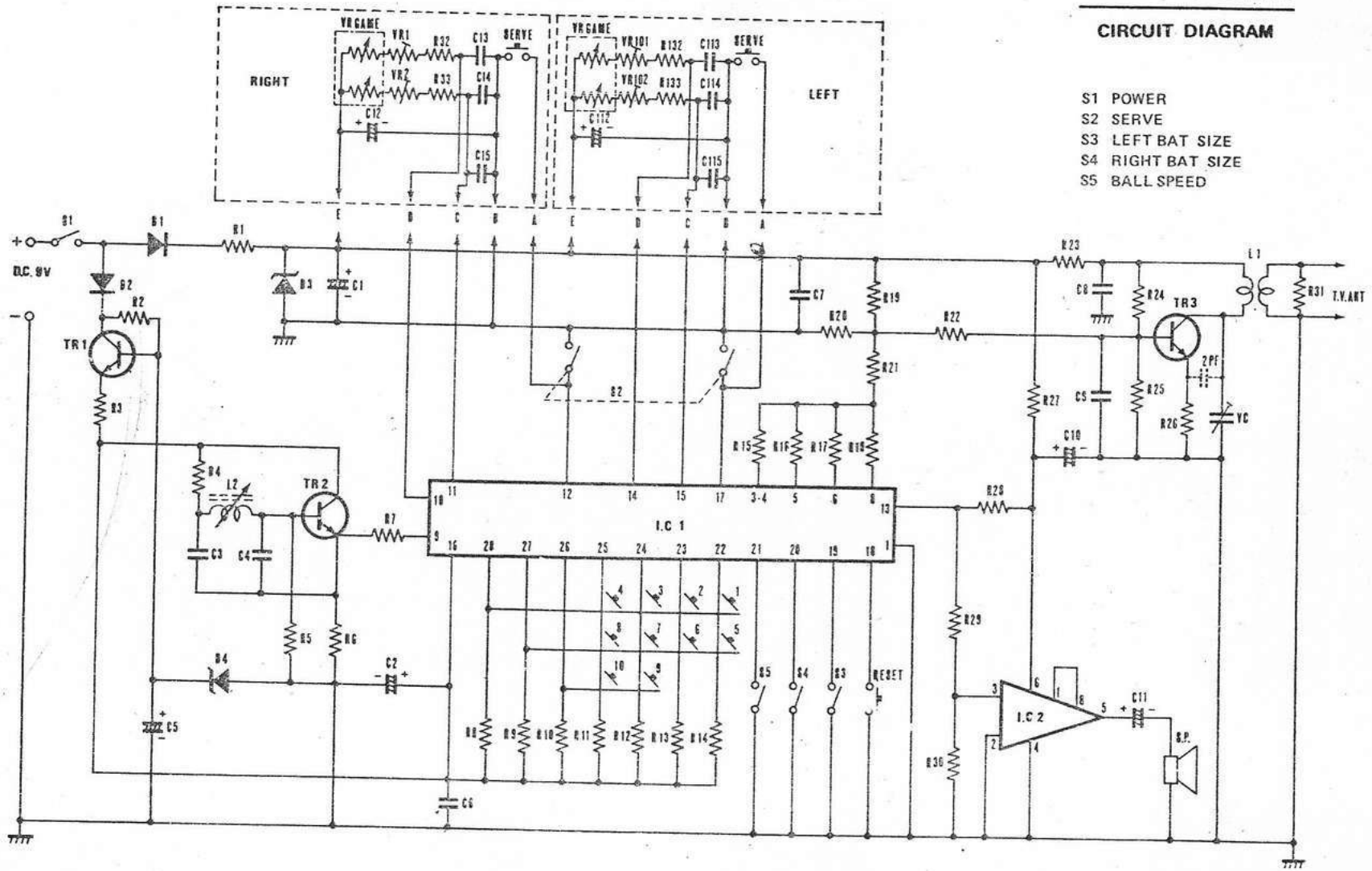

S1 POWER
S2 SERVE
S3 LEFT BAT SIZE
S4 RIGHT BAT SIZE
S5 BALL SPEED

TL-1002A

PARTS LIST

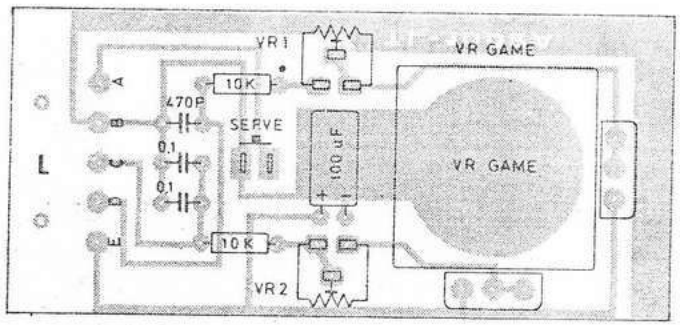

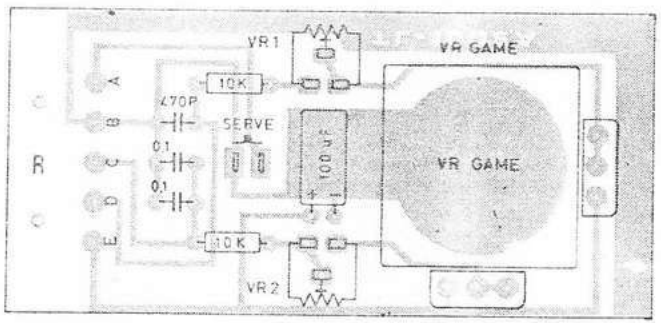

R1. 31	330
R2.	220
R3. 21	100
R4	18K
R5	470K
R6. 23. 26	1K
R7	10
R8. 9. 10	10K
R11. 12. 13. 14. 15	6.8K
R16. 24	3.3K
R17. 20	1.5K
R18	560
R19	12K
R22	1.2K
R25. 30	4.7K
R27	2.2K
R28. 29	100K
R32. 33. 132. 133	10K
VR1. 101. 2. 102	100K
VR GAME	2X200K
V.C.	15pF
C1. 2	1000uF
C3	15pF
C4	10pF
C5. 11	10uF
C6. 7. 14. 15. 114. 115	0.1uF
C8	1KpF
C9	390pF
C10	220uF
C12. 112	100uF
C13. 113	470pF
D1. 2	1N4002
D3	ZD. 6V8
D4	ZD. 7V5
TR1	2N3569
TR2. 3	C838
IC1	AY-3-8610-1
IC2	LM386
L1	75uuH
L2	150uH
S.P.	8Ω

TL-1002A

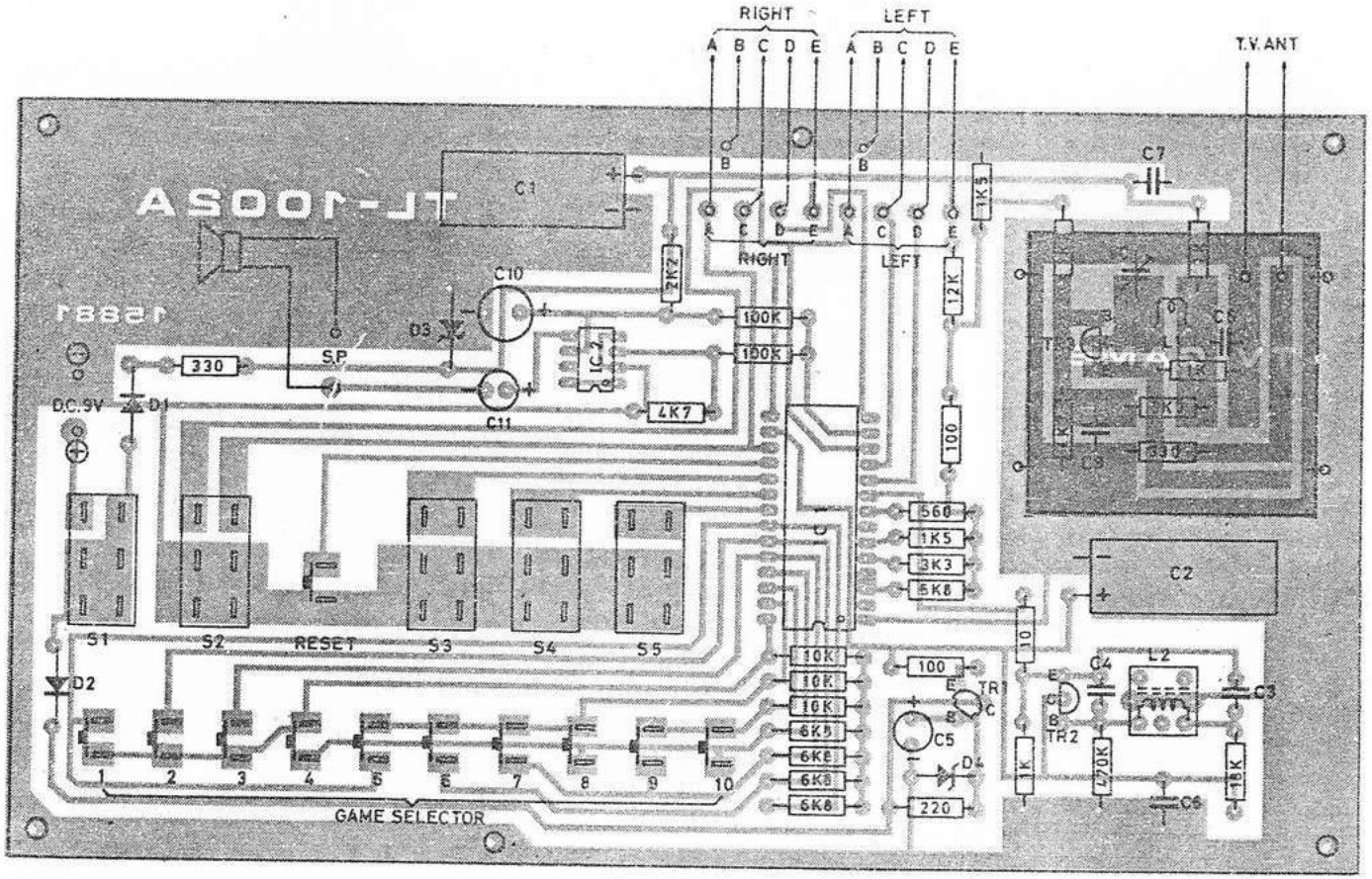
RIGHT
LEFT
A B C D E
T.V. ANT
C1
C7
C10
C11
D3
D1
D2
D4
SP
330
DC.9V
IC2
2K2
100K
4K7
12K
1K5
100
560
3K3
5K6
10K
6K8
220
10
1K
470K
18K
C2
C3
C4
C5
C6
C8
C9
L2
TR1
TR2
S1
S2
RESET
S3
S4
S5
GAME SELECTOR
1 2 3 4 5 6 7 8 9 10

TL-1108

PARTS LIST

R1	100K
R2	47K
R3	4,7K
C1	0,01uF
C2	100uF
TR	CS9012
IC	MM53108
D1.2.3	1N4002
T	P: 110V-220V S: 8V-16V-32V

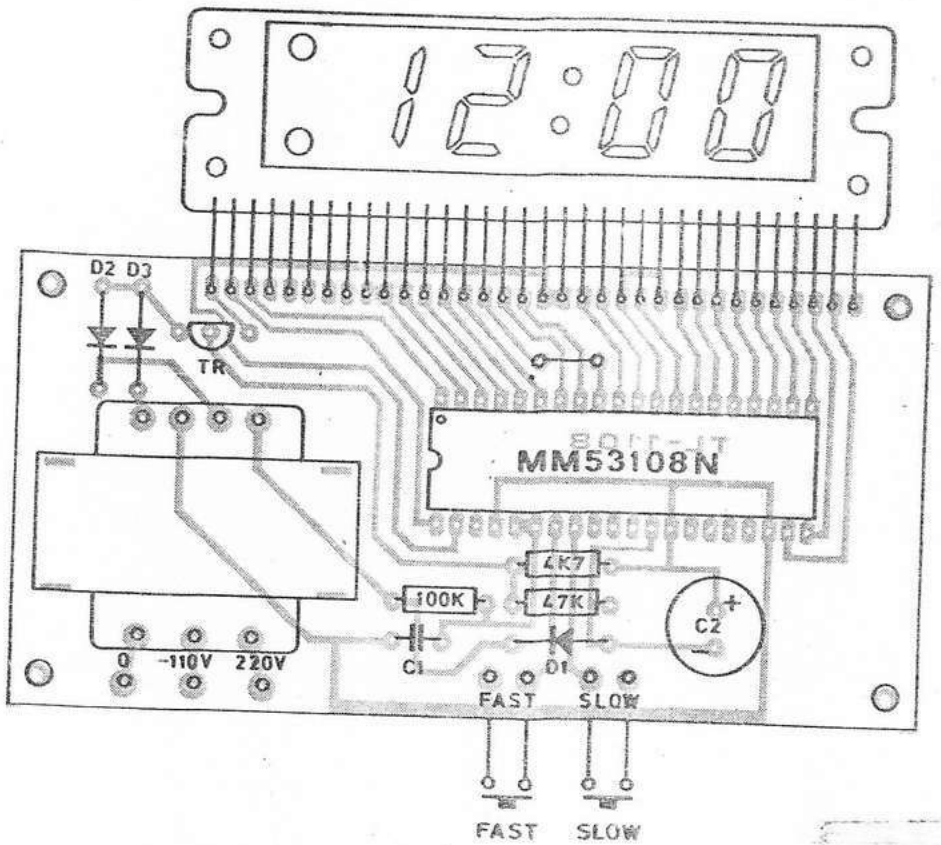

ELECTRONIC DIGITAL CLOCK

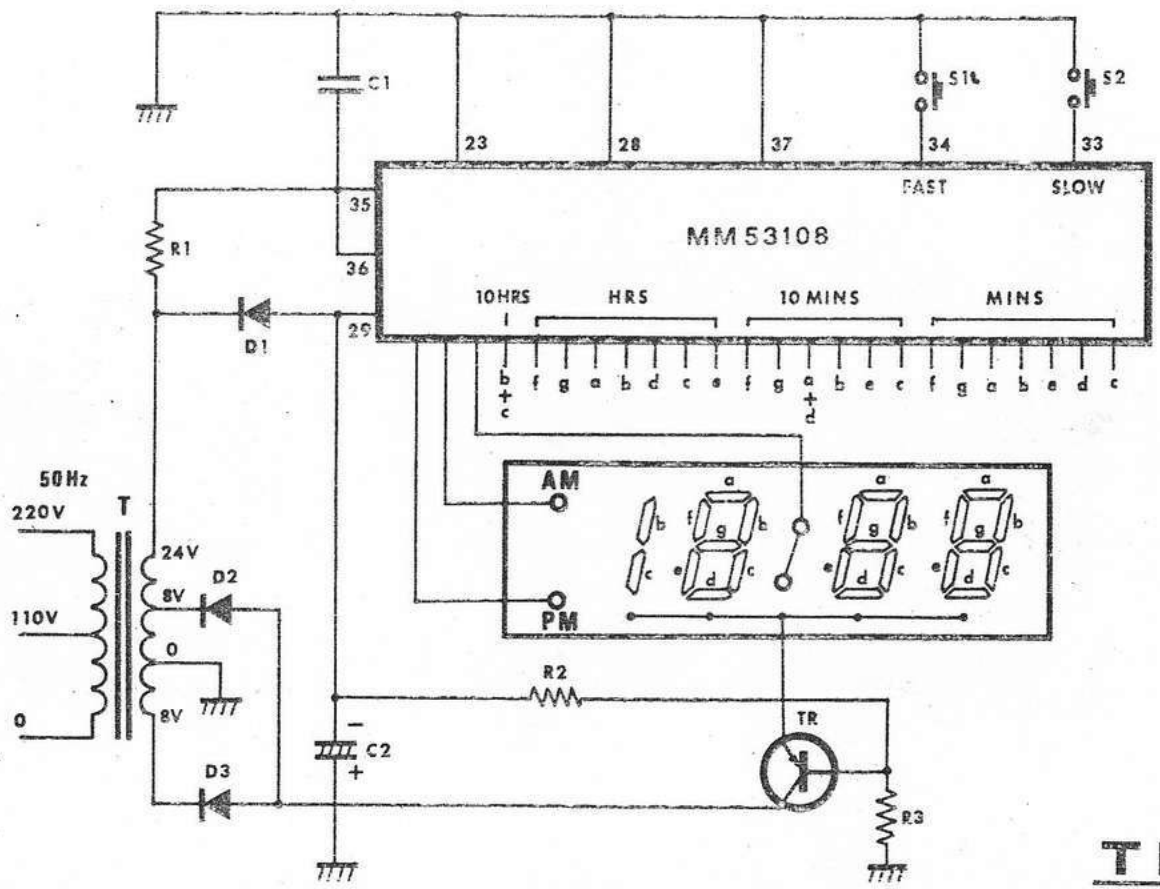

TL-1108

CIRCUIT DIAGRAM

TL-1109

PARTS LIST

R1.2.3.11	560	R12	10K	C5	47uF	TR2	CS9012
R4	470	R13	10	VC	36pF	TR4	CS9013
R5	3,3K	R14.15	4,7K			IC1	MM5369
R6	10M			D1.2.3	1N4002	IC2	TMS1952
R7	5,6M	C1	220uF	D4	ZD 9V1	X'TAL	3579,545Kc
R8	1M	C2	33pF	D5	1N4148	RELAY	12V
R9	5,6K	C3	10KpF	D6	LED	SPEAKER	8 ohm 2"
R10	100K	C4	33KpF	TR1.3	CS9014	DISPLAY	5-LT-16

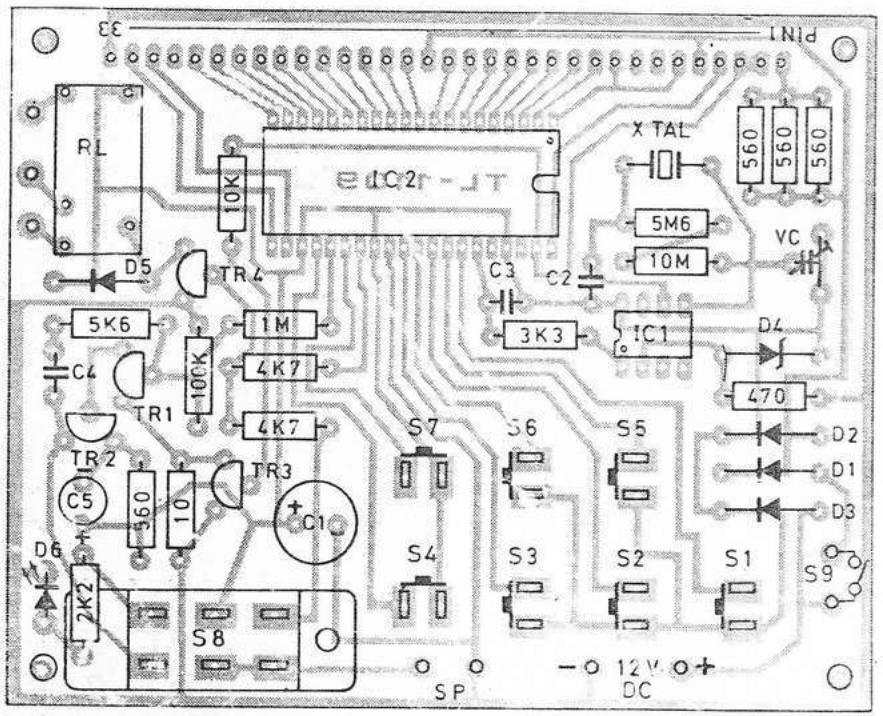

S1 FAST SET
S2 SECOND DISPLAY
S3 SLEEP DISPLAY
S4 SNOOZE
S5 SLOW SET
S6 ALARM DISPLAY
S7 ALARM OFF
S8 ALARM/TIMER SWITCH
S9 DISPLAY

ELECTRONIC DIGITAL CLOCK

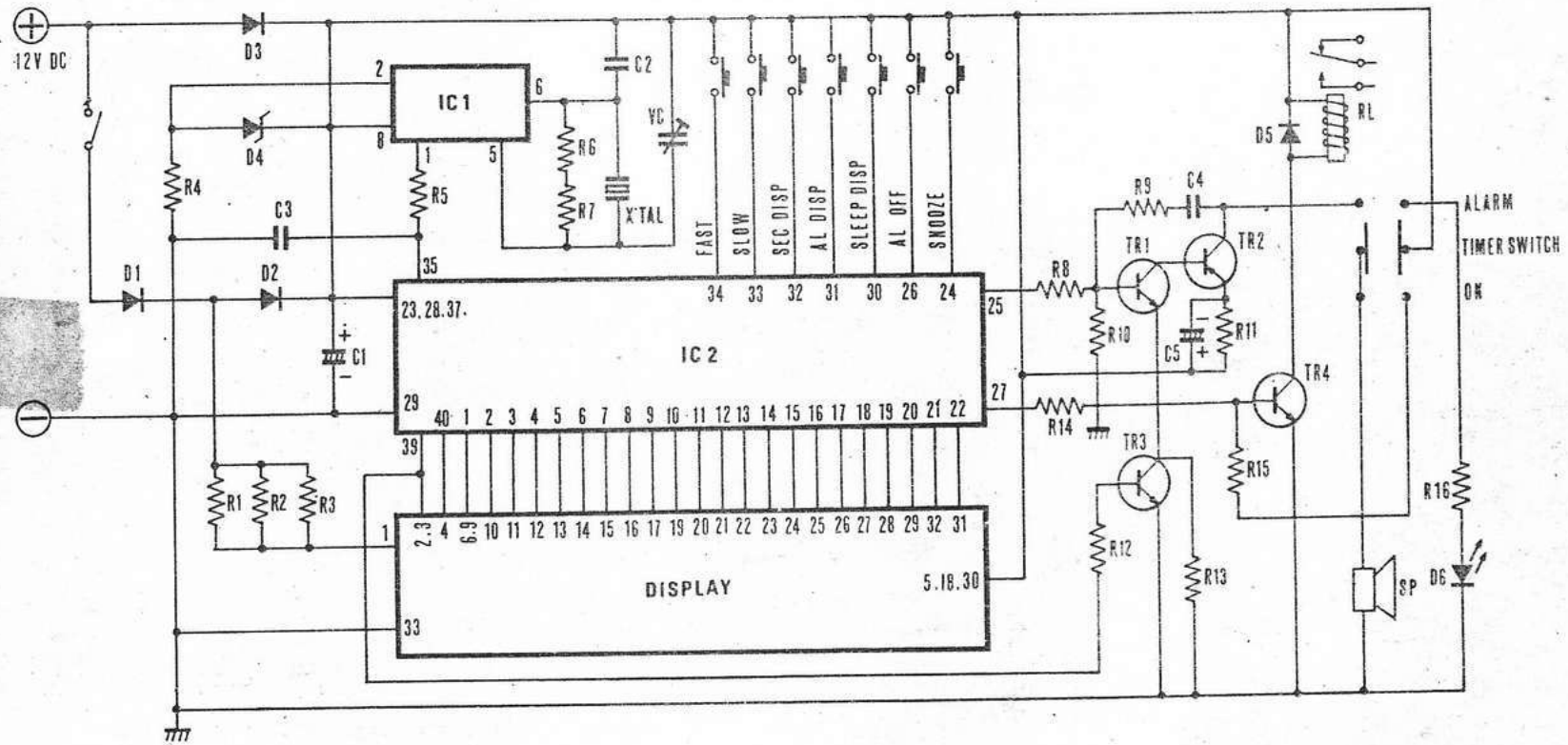

TL-1109

CIRCUIT DIAGRAM

ELECTRONIC DIGITAL CLOCK

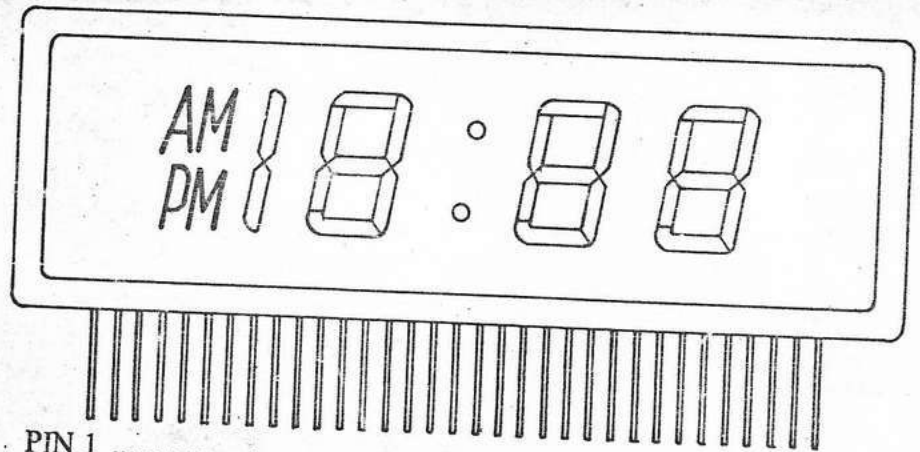

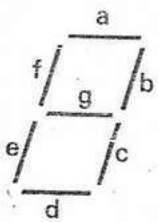

5-LT-16 : DISPLAY

1. FILAMENT
2. COLON 1
3. COLON 2
4. PM
5. GRID
6. AM
7. NC
8. NC
9. AM
10. b&c (10 HRS)
11. f (HRS)
12. g (")
13. a (")
14. b (")
15. d (")
16. c (")
17. e (")
18. GRID
19. f (10 MINS)
20. g (")
21. a&d (")
22. b (")
23. e (")
24. c (")
25. f (MINS)
26. g (")
27. a (")
28. b (")
29. e (")
30. NC.
31. c (MINS)
32. d (")
33. FILAMENT

2N 2646	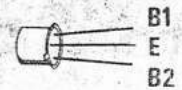
BC 107 BC 109 2N 2222A ZN 414	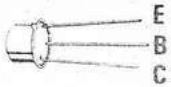
FCS 9012 FCS 9013 FCS 9014 FCS 9015 SE 4010 2N 3569 2N 4355	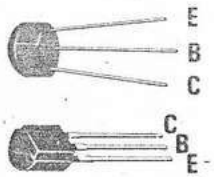
BC 141 BC 160 BC 161	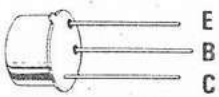
Q 4004LT Q 4006LT	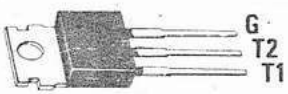
C 838	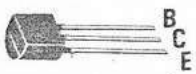
C 1162	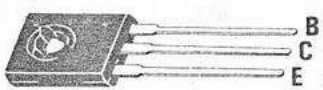

PT - 500	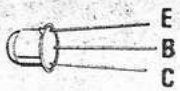
C 1061 D 317 B 512 A 671	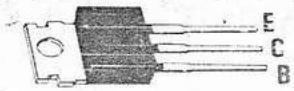
2SB 337 2SB 407 MJ 2955 MJ 4502 2N 3055	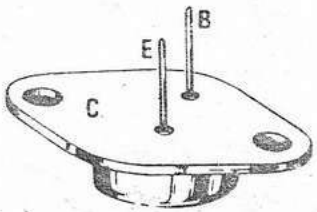
SPD MEL 11 MEL 12	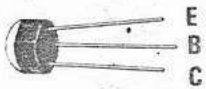
PUT MEU 21	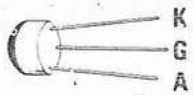
FOR 2B F7-21S	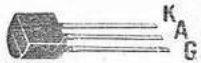
T 103 C 10	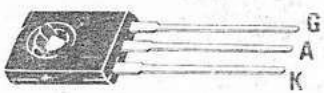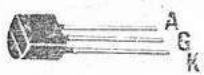
2N 5061 EC 103D